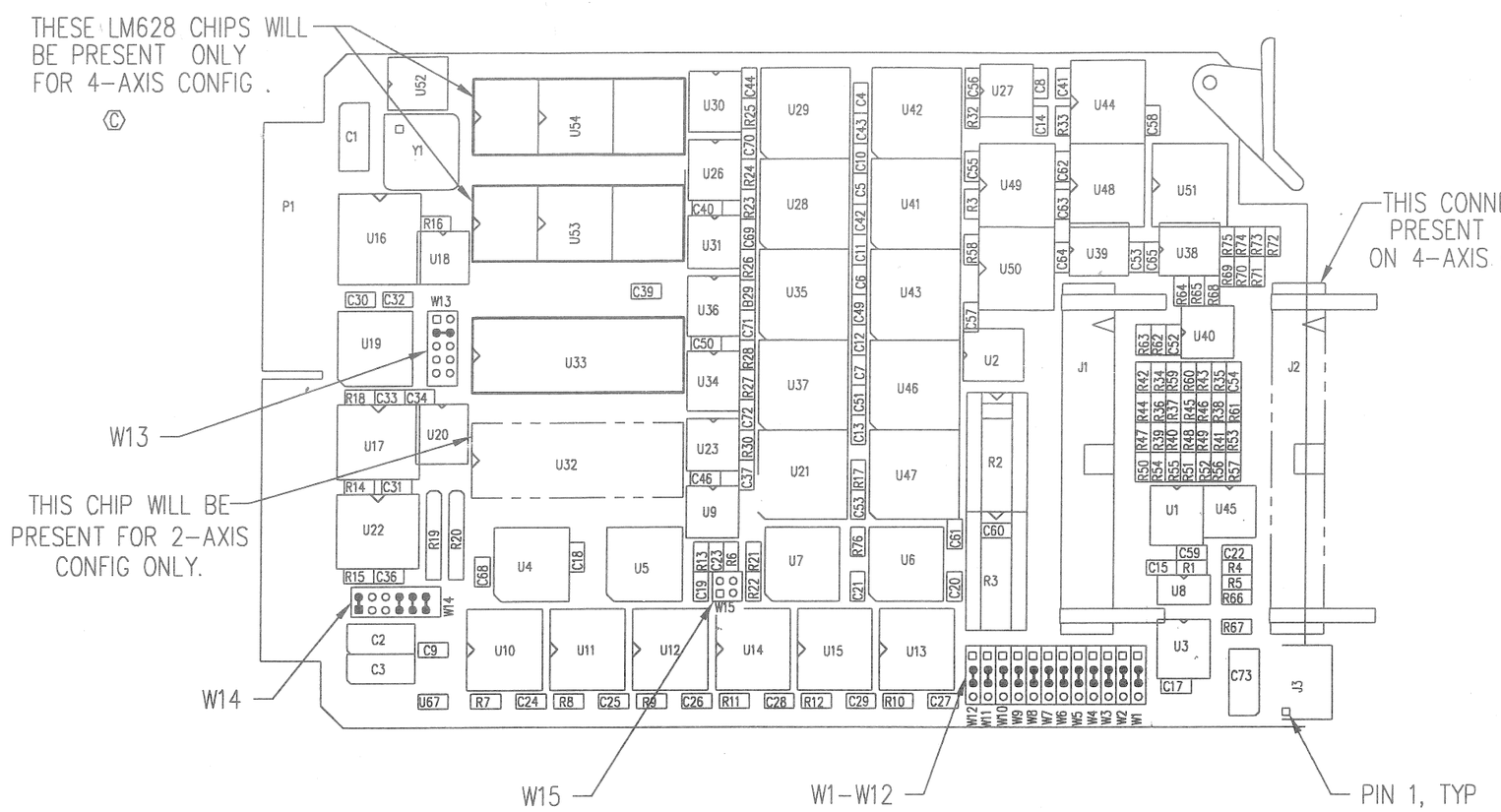

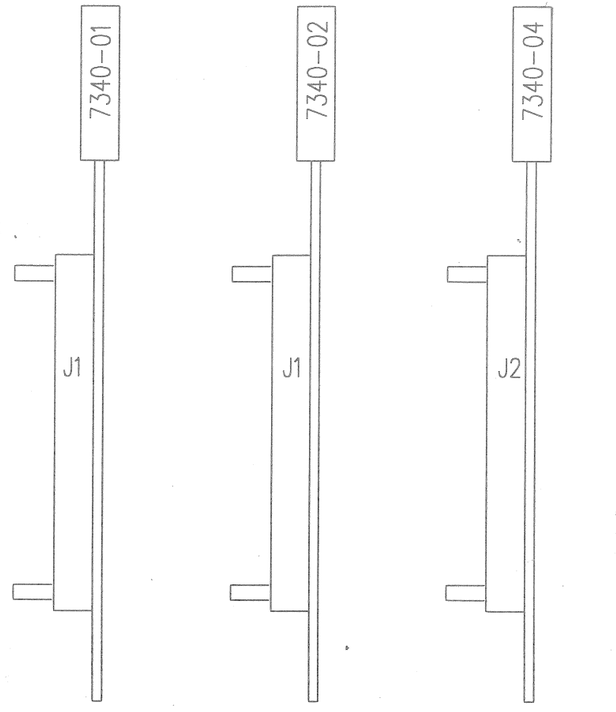

END VIEW
P/N 11442-11
1-AXIS
SERVO CARD

END VIEW
P/N 11442-12
2-AXIS
SERVO CARD

END VIEW
P/N 11442-14
4-AXIS
SERVO CARD

JUMPER TABLE		
REF DES	PIN NUMBER	
W1-W12	2-3	Ⓐ
W13	3-4	Ⓐ Ⓑ
W14	1-2, 7-8, 9-10, 11-12	
W15	ALL OPEN	

NOTES: UNLESS OTHERWISE SPECIFIED

1. IDENTIFY WITH PRO-LOG PART NUMBER AND MODEL NUMBER AS APPLICABLE.

2 SEE JUMPER TABLE FOR JUMPER CONFIGURATIONS.

4. DEBURR
3. SURFACE FINISH 125
2. ALL THREADS CLASS 2A OR 2B
1. PARTS TO CONFORM TO RIMROCK CORP. ENGR. & MFG. STANDARDS

NOTES (UNLESS OTHERWISE SPECIFIED)

P/N 11442-11 (SRV-1) 1-AXIS
P/N 11442-12 (SRV-2) 2-AXIS
P/N 11442-14 (SRV-4) 4-AXIS

ER	DATE	REMARKS	LET	DR	CK
328	4.29 99	ADDED P/N 11442-14 FOR 4-AXIS SERVO	C	DS	
164	10.15 96	ADDED P/N 11442-12 FOR 2-AXIS SERVO CARD, AND CHANGED JUMPER ON W13.	B	AR	
185	6.12 95	CORRECTED JUMPER TABLE PIN NUMBERING	A	DW	

REVISIONS

MAT'L:

RIMROCK®
* RIMROCK CORPORATION
1700 RIMROCK ROAD
COLUMBUS, OHIO 43219
*PHONE: 614-471-5926 FAX: 614-471-1073
*A Registered Trademark of Rimrock Corporation, Columbus, Ohio U.S.A.

TOLERANCES UNLESS OTHERWISE SPECIFIED
2-DIGIT DECIMALS= ±.010 FRACTIONS= ±1/64
3-DIGIT DECIMALS= ±.005 ANGLES= ±1/2
4-DIGIT DECIMALS= ±.0005

DR AR	DATE 6.6.95	SCALE FULL	PIC		
CK	DATE	ER 180	SHEET 1 OF 1		
DRAWING NO. 140B11442-11				REV C	
DRAWING NAME SERVO CARD - PROLOG					
FOR TRIANGLE CONTROLS					

THIS DRAWING IS THE PROPERTY OF RIMROCK CORP. AND IS FOR THE CONFIDENTIAL USE OF THE BUYER OR SUPPLIER OF THIS EQUIPMENT

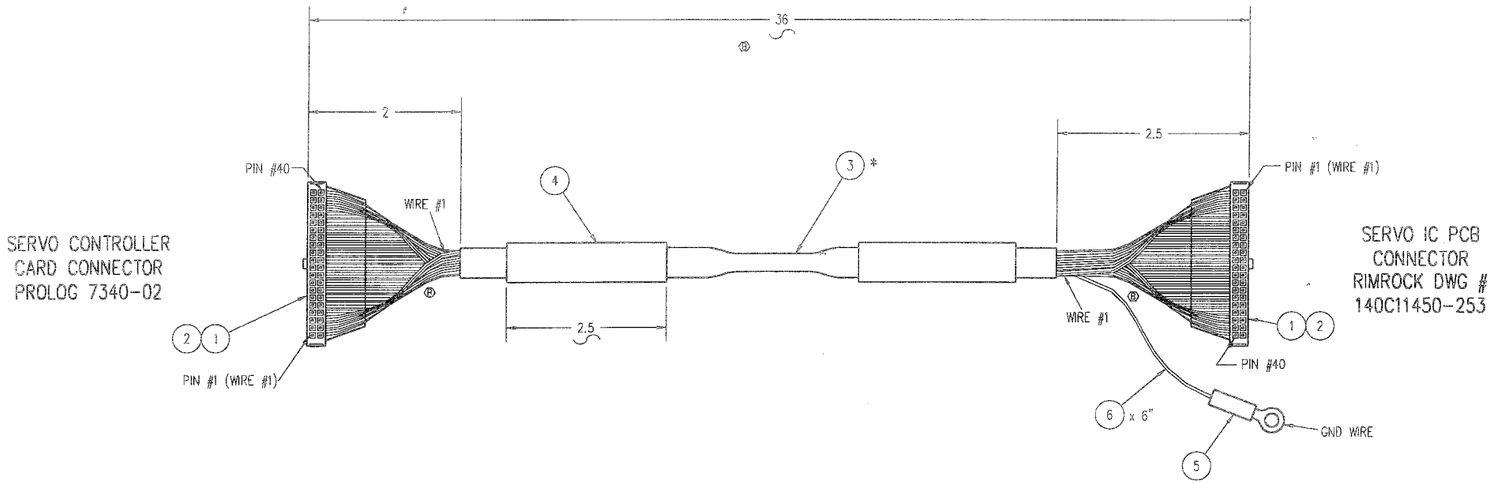

* NOTE:
FLAT PORTION OF CABLE REPEATS EVERY 18"
CUT CABLE AT MIDPOINT OF FLAT PORTION (APPROX. 36")

ITEM	DESCRIPTION	QTY.	PART NUMBER
6	GROUND WIRE	6 IN.	02898-47
5	RING TERMINAL	1	04727-6
4	SHRINK TUBE, 1/2" BLACK	5 IN.	09810-14
3	ROUND TO FLAT CABLE	36IN.	16806-03
2	STRAIN RELIEF	2	11042-341
1	40-PIN CONNECTOR	2	11042-340

NOTE: FOR PROLOG 7340-02 & -01 P/N 16814-02

NOTES (UNLESS OTHERWISE SPECIFIED)
1. PARTS TO CONFORM TO RIMROCK CORP. ENGR. & MFG. STANDARDS
2. ALL THREADS CLASS 2A OR 2B
3. SURFACE FINISH 125
4. DEBURR

ER	DATE	REMARKS	LET	DR	CK
121	3.20 96	REDRAWN TO CURRENT STYLE, SHOWING LENGTHS AND WIRES	B	SUE	
349	10.16 96	UPDATED TO AS BUILT	A	AR	

REVISIONS

MAT'L: SEE ABOVE

RIMROCK

RIMROCK CORPORATION
1700 RIMROCK ROAD
COLUMBUS, OHIO 43219
PHONE: 614-471-5926 FAX: 614-471-1033
® Registered Trademark of Rimrock Corporation, Columbus, Ohio U.S.A.

TOLERANCES UNLESS OTHERWISE SPECIFIED
2-DIGIT DECIMALS= ±.010 FRACTIONS= ±1/64
3-DIGIT DECIMALS= ±.005 ANGLES= ±1/2
4-DIGIT DECIMALS= ±.0005

DR AOR DATE 10.4.96 SCALE FULL PIC
CK DATE ER 335 SHEET OF
DRAWING NO. 406C16814-02 REV B
DRAWING NAME CABLE, 2-AXIS SERVO CARD
TO 405 IC PCB
FOR TRIANGLE

THIS DRAWING IS THE PROPERTY OF RIMROCK CORP. AND IS FOR THE CONFIDENTIAL USE OF THE BUYER OR SUPPLIER OF THIS EQUIPMENT.

NOTE:
INSERT POLARIZING KEY (ITEM #4) INTO CONNECTOR (ITEM #5) BETWEEN SLOTS 23/24 AND 25/26 AS SHOWN.

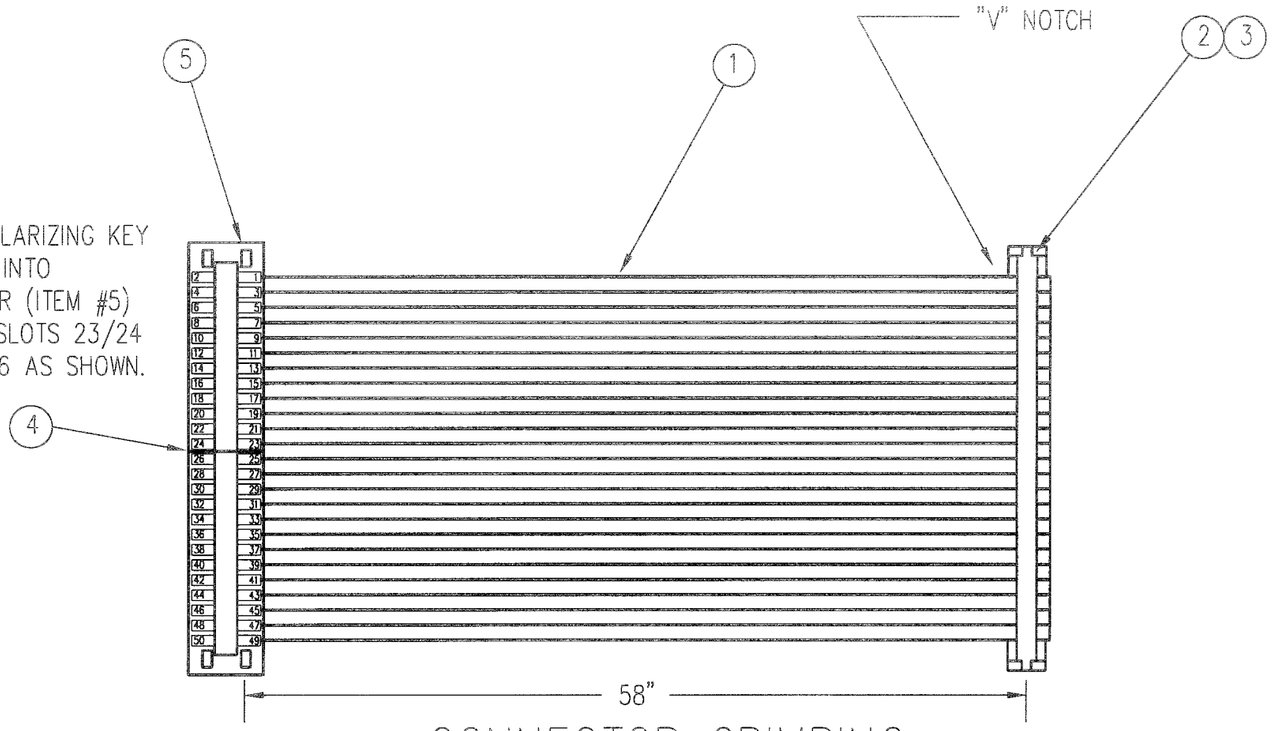

CONNECTOR CRIMPING

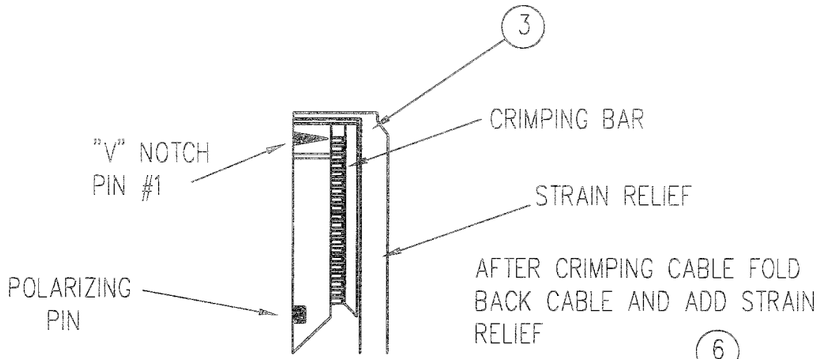

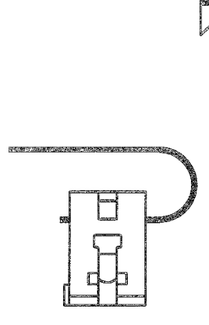

STEP 1:
FOLD RIBBON CABLE OVER TOP OF CONNECTOR

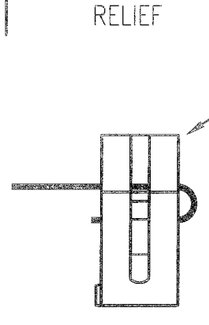

STEP 2:
PLACE STRAIN RELIEF (ITEM #6) DOWN OVER CABLE UNTIL IT "SNAPS"

STRAIN RELIEF ASSEMBLY

ITEM	DESCRIPTION	QTY	PART NUMBER
6	STRAIN RELIEF FOR ITEM 5	1	10935-001
5	EDGE CONNECTOR ANSLEY 609-5051M	1	10935-010
4	POLARIZING KEY ANSLEY 609-0005	1	10935-013
3	STRAIN RELIEF ANSLEY 609-5031	1	11042-250
2	HEADER CONNECT. ANSLEY 609-5030	1	11042-350
1	RIBBON CABLE ANSLEY 171-50	58"	11041-50

PART NO. 11083-04

4. DEBURR
3. SURFACE FINISH 125
2. ALL THREADS CLASS 2A OR 2B
1. PARTS TO CONFORM TO RIMROCK CORP. ENGR. & MFG. STANDARDS

NOTES (UNLESS OTHERWISE SPECIFIED)

ER	DATE	REMARKS	LET	DR	CK
195	11/11/94	REMOVE -05 & -06 -- NOT NEEDED, MAKE ALL 58" LONG	A	RJM	

REVISIONS

MAT'L: SEE ABOVE

RIMROCK®
* RIMROCK CORPORATION
1700 RIMROCK ROAD
COLUMBUS, OHIO 43219
*PHONE: 614-471-5926 FAX: 614-471-1073

*A Registered Trademark of Rimrock Corporation, Columbus, Ohio U.S.A.

TOLERANCES UNLESS OTHERWISE SPECIFIED
2-DIGIT DECIMALS= ±.010 FRACTIONS= ±1/64
3-DIGIT DECIMALS= ±.005 ANGLES= ±1/2
4-DIGIT DECIMALS= ±.0005

DR CKG	DATE 04.28.94	SCALE FULL	PIC
CK	DATE	ER 106	SHEET OF

DRAWING NO. 306B11083-04 REV A

DRAWING NAME I/O RACK RIBBON CABLE

FOR TRIANGLE CONTROL SYSTEM

THIS DRAWING IS THE PROPERTY OF RIMROCK CORP. AND IS FOR THE CONFIDENTIAL USE OF THE BUYER OR SUPPLIER OF THIS EQUIPMENT

NOTE: JUMPER PIN NUMBERING SYSTEM

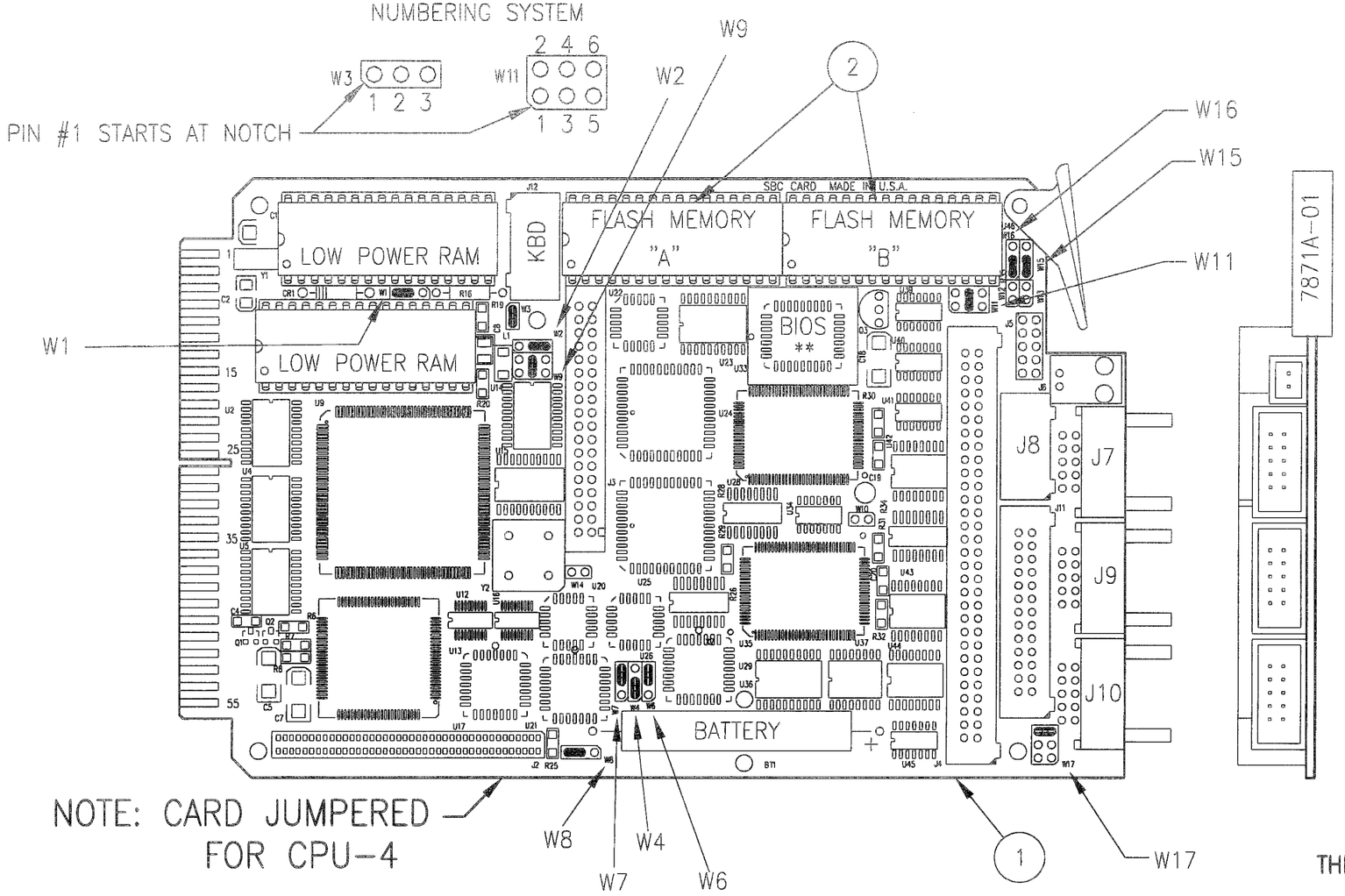

JUMPER CONFIGURATIONS

CPU-4	
W1	2-3
W2	2-3
W3	1-2
W4	1-2
W6	2-3
W7	2-3
W8	2-3
W9	3-4
W10	NONE
W11	3-4
W12	NONE
W13	NONE
W14	NONE
W15	1-2
W16	1-2
W17	5-6

W5 IS NOT PRESENT ON THIS BOARD

** BIOS MUST BE MOTOROLA PART NUMBER 120655-005 OR LATER FOR YEAR 2000 COMPLIANCE

THIS CPU REPLACES ANY OF THE CPU-1, -2 OR -3 (RIMROCK PN'S 11440-05, -06, 08)

P/N 11440-10 1024K RAM (CPU-4)

NOTE: LOW POWER BATTERY BACKED RAM - USED TO STORE CUSTOMER PROGRAM PARAMETERS AND SYSTEM MEMORY.
FLASH MEMORY - RIMROCK AND SYSTEM PROGRAMS.

NOTES (UNLESS OTHERWISE SPECIFIED)
1. PARTS TO CONFORM TO RIMROCK CORP. ENGR. & MFG. STANDARDS
2. ALL THREADS CLASS 2A OR 2B
3. SURFACE FINISH 125
4. DEBURR

ER	DATE	REMARKS	LET	DR	CK

REVISIONS

MAT'L: SEE BOM

RIMROCK®
* RIMROCK CORPORATION
1700 RIMROCK ROAD
COLUMBUS, OHIO 43219
*PHONE: 614-471-5926 FAX: 614-471-1073

*A Registered Trademark of Rimrock Corporation, Columbus, Ohio U.S.A.

TOLERANCES UNLESS OTHERWISE SPECIFIED
2-DIGIT DECIMALS= ±.010 FRACTIONS= ±1/64
3-DIGIT DECIMALS= ±.005 ANGLES= ±1/2
4-DIGIT DECIMALS= ±.0005

DR MF	DATE 12.21.98	SCALE FULL	PIC
CK	DATE	ER 1033	SHEET OF

DRAWING NO. 140B11440-10 REV

DRAWING NAME SINGLE BOARD SYSTEM

FOR TRIANGLE SYSTEM

THIS DRAWING IS THE PROPERTY OF RIMROCK CORP. AND IS FOR THE CONFIDENTIAL USE OF THE BUYER OR SUPPLIER OF THIS EQUIPMENT

NOTE: JUMPER PIN NUMBERING SYSTEM

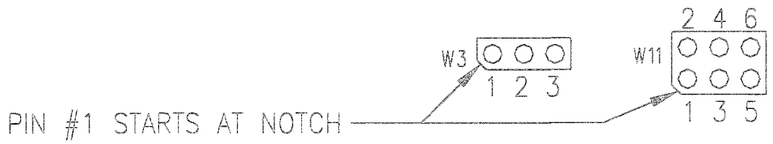

JUMPER CONFIGURATIONS

DBO-1	
W1	1-2
W2	1-2

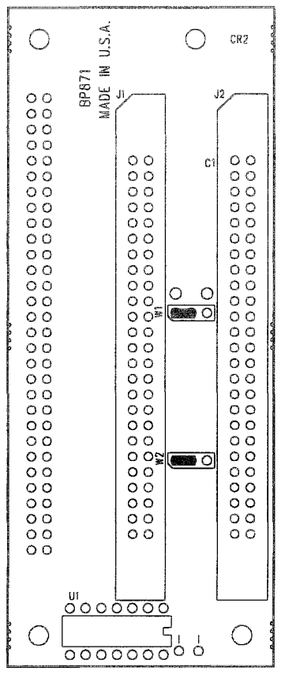

FRONT VIEW

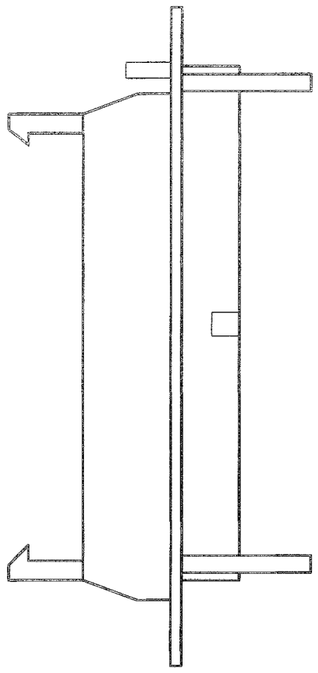

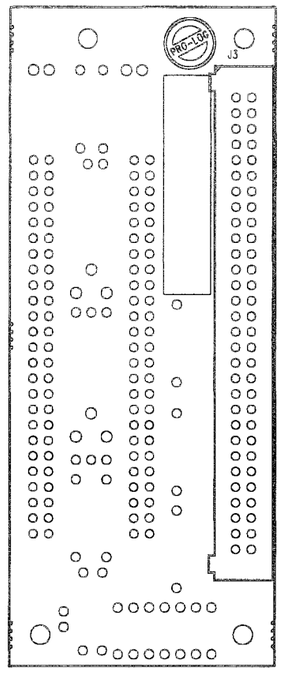

REAR VIEW

P/N-11440-11

4. DEBURR
3. SURFACE FINISH 125
2. ALL THREADS CLASS 2A OR 2B
1. PARTS TO CONFORM TO RIMROCK CORP. ENGR. & MFG. STANDARDS

NOTES (UNLESS OTHERWISE SPECIFIED)

ER	DATE	REMARKS	LET	DR	CK

REVISIONS

MAT'L: SEE B.O.M.

RIMROCK®

* RIMROCK CORPORATION
1700 RIMROCK ROAD
COLUMBUS, OHIO 43219

*PHONE: 614-471-5926 FAX: 614-471-1073

*A Registered Trademark of Rimrock Corporation, Columbus, Ohio U.S.A.

TOLERANCES UNLESS OTHERWISE SPECIFIED
2-DIGIT DECIMALS= ±.010 FRACTIONS= ±1/64
3-DIGIT DECIMALS= ±.005 ANGLES= ±1/2
4-DIGIT DECIMALS= ±.0005

DR CKG	DATE 4.13.94	SCALE FULL	PIC
CK	DATE	ER 106	SHEET 1 OF 1

DRAWING NO. 140B11440-11 REV

DRAWING NAME I/O BREAK OUT CARD

FOR TRIANGLE SYSTEM

THIS DRAWING IS THE PROPERTY OF RIMROCK CORP. AND IS FOR THE CONFIDENTIAL USE OF THE BUYER OR SUPPLIER OF THIS EQUIPMENT

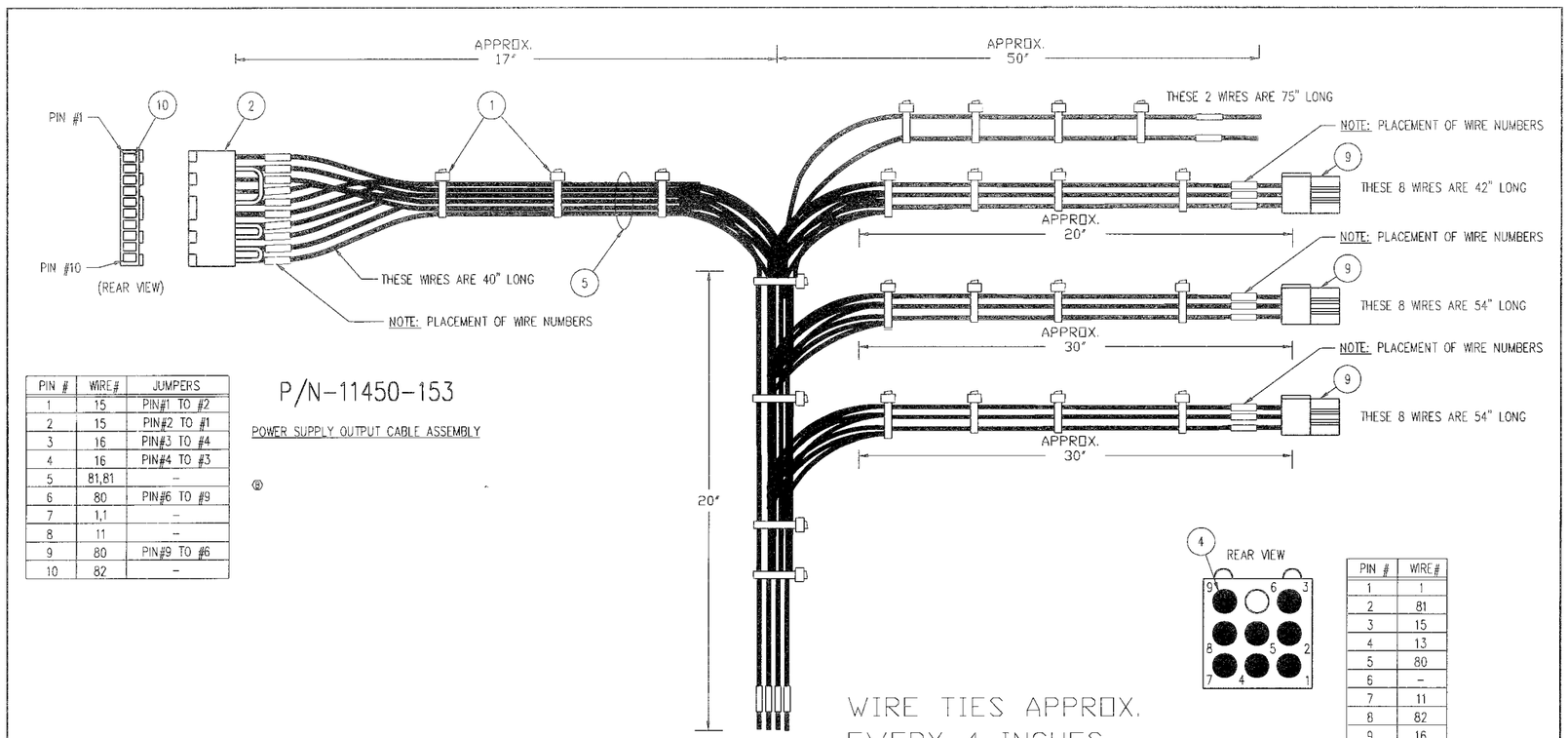

PIN #	WIRE#	JUMPERS
1	15	PIN#1 TO #2
2	15	PIN#2 TO #1
3	16	PIN#3 TO #4
4	16	PIN#4 TO #3
5	81,81	–
6	80	PIN#6 TO #9
7	1,1	–
8	11	–
9	80	PIN#9 TO #6
10	82	–

P/N-11450-153

POWER SUPPLY OUTPUT CABLE ASSEMBLY

PIN #	WIRE#
1	1
2	81
3	15
4	13
5	80
6	–
7	11
8	82
9	16

ITEM	DESCRIPTION	VENDOR	QTY	VENDOR P/N	RIMROCK P/N
10	CRIMP STYLE CONECTOR PIN	MOLEX	13	08-50-0106	11042-607
9	9-PIN CONNECTOR PLUG	MOLEX	3	03-06-1092	11042-601
8	WIRE 20AWG RED	BELDON	3ft	8523-1-1000	02898-72
7	WIRE 20AWG WHITE	CARAL	3ft	C204046-02	02898-71
6	WIRE 20AWG GREEN	MANHAN	3ft	W203-1000-GRN	02898-49
5	WIRE 20 AWG BLUE	ALPHA	150'	1856/19	02898-49
4	FEMALE TERMINAL .062 TIN	MOLEX	24	02-06-1103	11042-604
3	5-PIN CONNECTOR PLUG	MOLEX	1	09-50-3051-P	11042-605
2	10 PIN CONNECTOR PLUG	MOLEX	1	09-50-3101-P	11042-606
1	WIRE TIE, SMALL	PANDUIT	35	PLT 1M	03010

PIN #	COLOR
5	RED
4	–
3	WHITE
2	–
1	GREEN

P/N-11450-28

POWER SUPPLY INPUT CABLE ASSEMBLY

4. DEBURR
3. SURFACE FINISH 125
2. ALL THREADS CLASS 2A OR 2B
1. PARTS TO CONFORM TO RIMROCK CORP. ENGR. & MFG. STANDARDS

NOTES (UNLESS OTHERWISE SPECIFIED)

ER	DATE	REMARKS	LET	DR	CK
421	5-18-98	CORRECTED TABLE JUMPERS WERE LABELED WRONG	B	MAR	
078	2-6-98	FIXED PART NUMBER	A	MAR	

REVISIONS

MATL: SEE B.O.M.

RIMROCK CORPORATION
1700 RIMROCK ROAD
COLUMBUS, OHIO 43219
PHONE: 614-471-5928 FAX: 614-471-1073
*A Registered Trademark of Rimrock Corporation, Columbus, Ohio U.S.A.

TOLERANCES UNLESS OTHERWISE SPECIFIED
2-DIGIT DECIMALS= ±.010 FRACTIONS= ±1/64
3-DIGIT DECIMALS= ±.005 ANGLES= ±1/2
4-DIGIT DECIMALS= ±.0005

DR MAR | DATE 1-26-98 | SCALE FULL | PIC
CK | DATE | ER 050 | SHEET OF

DRAWING NO. 140C11450-153 | REV B

DRAWING NAME POWER SUPPLY CABLE ASSY

FOR TRIANGLE SYSTEM

THIS DRAWING IS THE PROPERTY OF RIMROCK CORP. AND IS FOR THE CONFIDENTIAL USE OF THE BUYER OR SUPPLIER OF THIS EQUIPMENT.

CONNECTION #	WIRE NUMBER	WIRE COLOR	FUNCTION
12	56	RED	KEYPAD 18VAC
11	16	BLUE	KEYPAD COMM
10	–	–	
9	–	–	
8	–	–	
7	55	RED	KEYPAD 18VAC
6	901	RED	120 VAC
5	9L2	WHITE	120 VAC COMM
4	–	–	
3	–	–	
2	–	–	
1	–	–	

TRANSFORMER CONNECTIONS Ⓐ Ⓒ

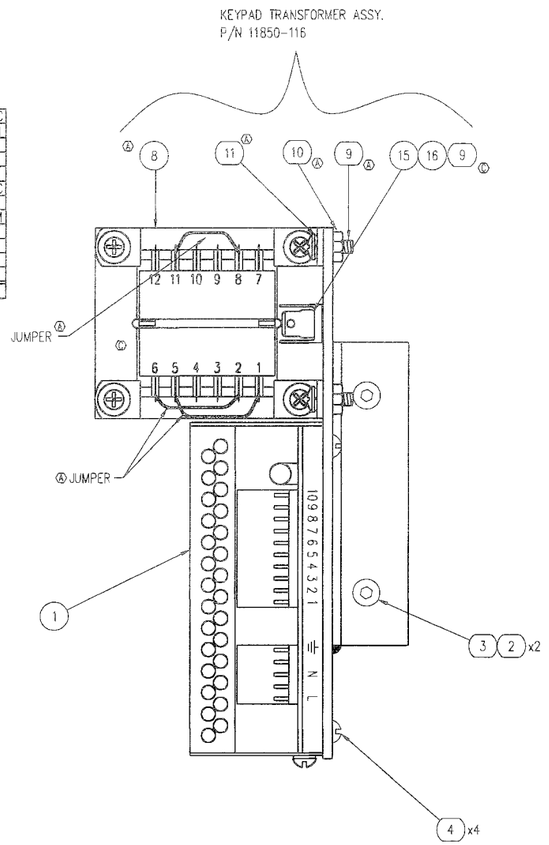

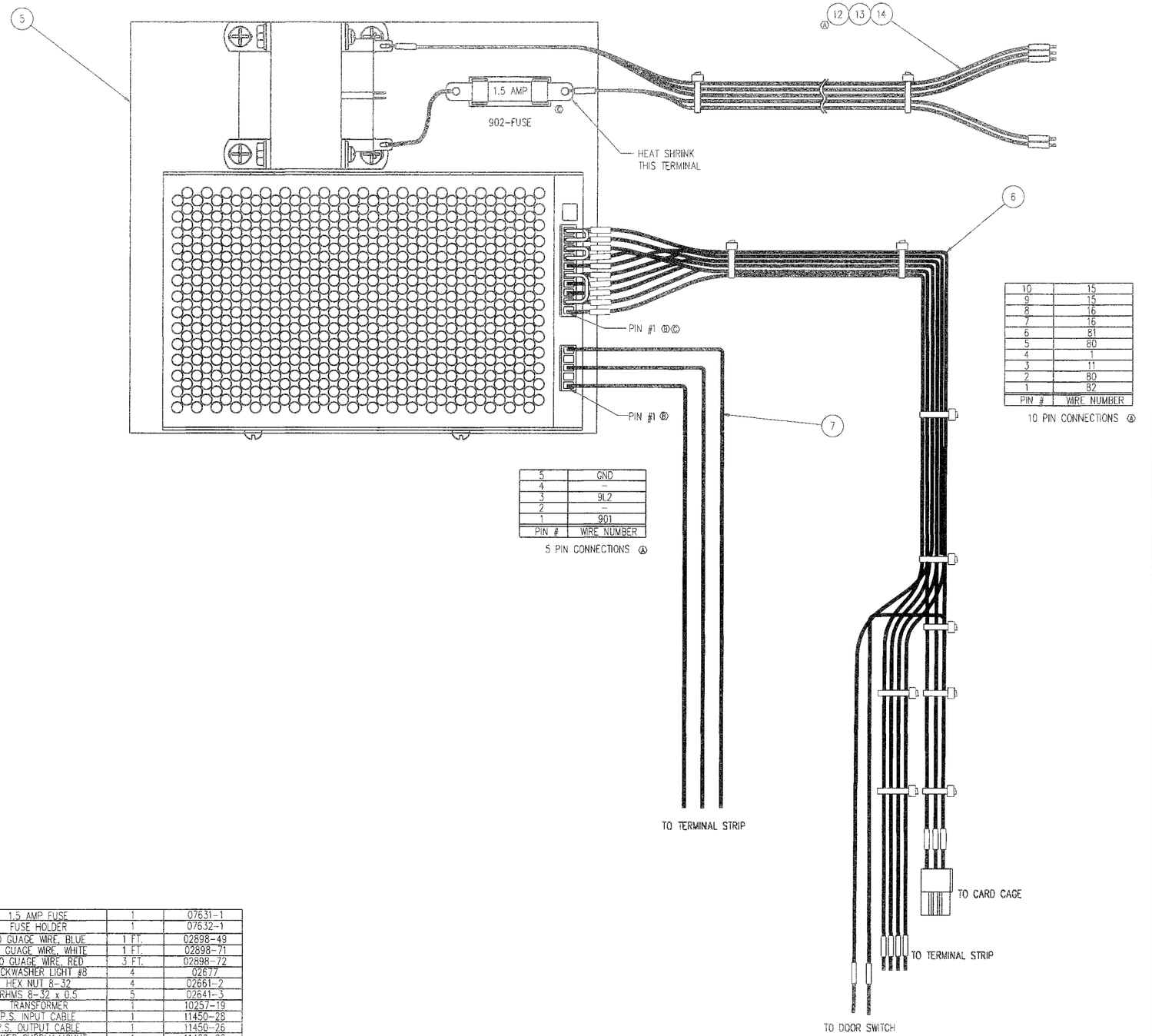

PIN #	WIRE NUMBER
5	GND
4	–
3	9L2
2	–
1	901

5 PIN CONNECTIONS Ⓐ

PIN #	WIRE NUMBER
10	15
9	15
8	16
7	16
6	81
5	80
4	1
3	11
2	80
1	82

10 PIN CONNECTIONS Ⓐ

BAL.#	DESCRIPTION	QTY.	PART NUMBER
Ⓒ 16	1.5 AMP FUSE	1	07631-1
Ⓒ 15	FUSE HOLDER	1	07632-1
Ⓒ Ⓐ 14	20 GUAGE WIRE, BLUE	1 FT.	02898-49
Ⓒ Ⓐ 13	20 GUAGE WIRE, WHITE	1 FT.	02898-71
Ⓒ Ⓐ 12	20 GUAGE WIRE, RED	3 FT.	02898-72
Ⓒ Ⓐ 11	LOCKWASHER LIGHT #8	4	02677
Ⓒ Ⓐ 10	HEX NUT 8-32	4	02661-2
Ⓒ Ⓐ 9	RHMS 8-32 x 0.5	5	02641-3
Ⓒ Ⓐ 8	TRANSFORMER	1	10257-19
7	P.S. INPUT CABLE	1	11450-28
6	P.S. OUTPUT CABLE	1	11450-26
5	POWER SUPPLY MOUNT	1	11429-08
4	BHCS 6-32 X 3/8	4	08058-6
3	LOCK WASHER, LIGHT #10	2	02678
2	RHMS 10-32 X 1/2	2	02627
1	POWER SUPPLY	1	02275-400

4. DEBURR
3. SURFACE FINISH 125
2. ALL THREADS CLASS 2A OR 2B
1. PARTS TO CONFORM TO RIMROCK CORP. ENGR. & MFG. STANDARDS

NOTES (UNLESS OTHERWISE SPECIFIED)

ER	DATE	REMARKS	LET	DR	CK
0033	1.21 99	UNPHANTOMED TRANSFORMER, ADDED FUSE MADE TRANSFORMER A SUB-ASSY.	C	JPS	
0033	1.21 99	CORRECTED JUMPERS ON POWER SUPPLY OUTPUT CABLE	C	JPS	
776	9.23 98	MIRRORED PIN 1 POSITIONS	B	SME	
727	9.14 98	ADDED TRANSFORMER, ALONG WITH WIRING AND FASTENERS FOR IT, ADDED CHARTS	A	SME	

REVISIONS

MAT'L: SEE B.O.M.

RIMROCK CORPORATION
1700 RIMROCK ROAD
COLUMBUS, OHIO 43216
PHONE: 614-471-5026 FAX: 614-471-1073
* A Registered Trademark of Rimrock Corporation, Columbus, Ohio U.S.A.

TOLERANCES UNLESS OTHERWISE SPECIFIED
2-DIGIT DECIMALS= ±.010 FRACTIONS= ±1/64
3-DIGIT DECIMALS= ±.005 ANGLES= ±1/2
4-DIGIT DECIMALS= ±.0005

DR SME DATE 3.4.98 SCALE FULL PIC
CK DATE DR 134 SHEET OF
DRAWING NO. 140D11450-70 REV C
DRAWING NAME TRIANGLE POWER SUPPLY ASSY.
FOR TRIANGLE CONTROLS

THIS DRAWING IS THE PROPERTY OF RIMROCK CORP. AND IS FOR THE CONFIDENTIAL USE OF THE BUYER OR SUPPLIER OF THIS EQUIPMENT.

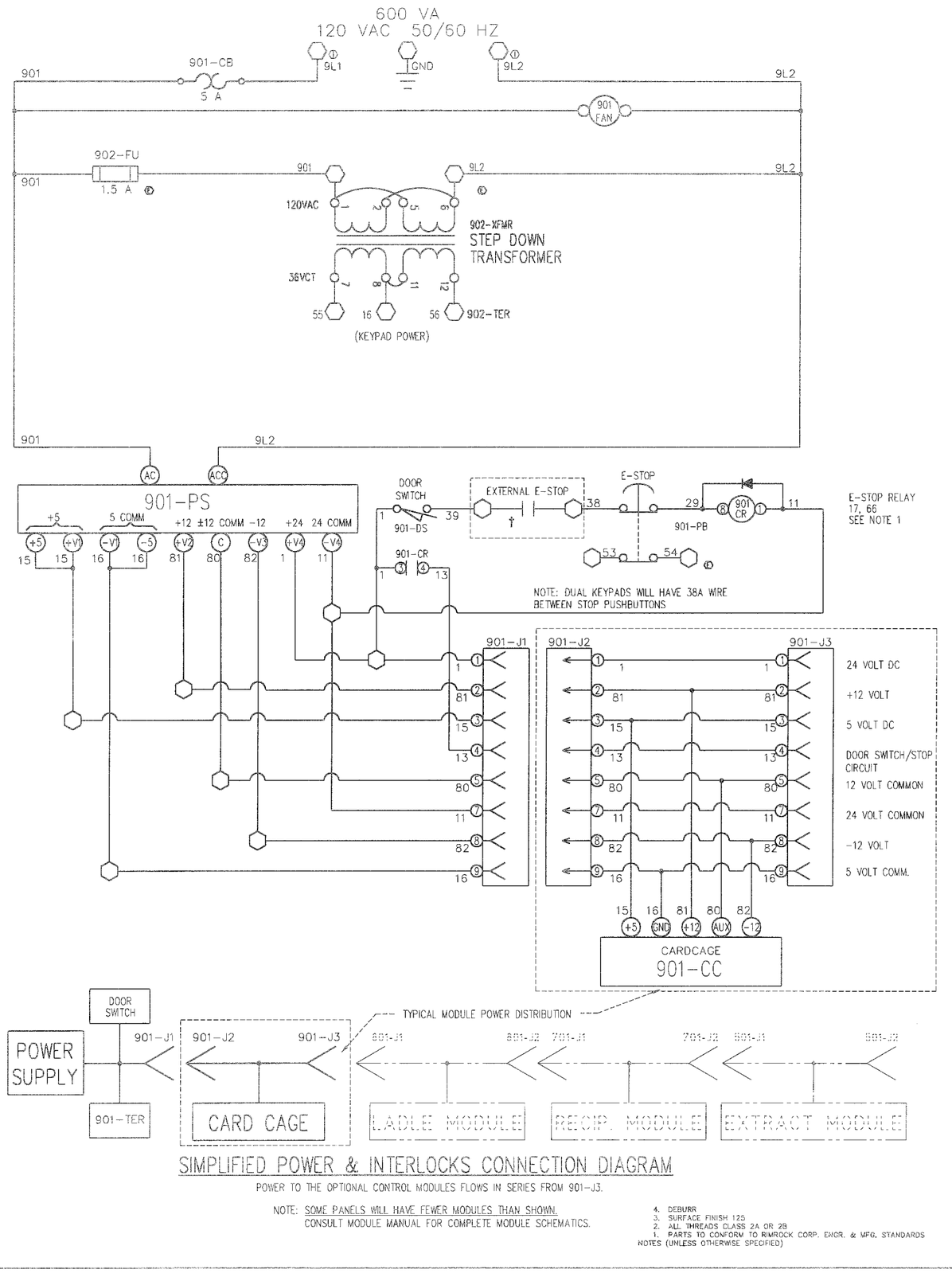

SIMPLIFIED POWER & INTERLOCKS CONNECTION DIAGRAM

POWER TO THE OPTIONAL CONTROL MODULES FLOWS IN SERIES FROM 901-J3.

NOTE: SOME PANELS WILL HAVE FEWER MODULES THAN SHOWN.
CONSULT MODULE MANUAL FOR COMPLETE MODULE SCHEMATICS.

NOTES (UNLESS OTHERWISE SPECIFIED)
1. PARTS TO CONFORM TO RIMROCK CORP. ENGR. & MFG. STANDARDS
2. ALL THREADS CLASS 2A OR 2B
3. SURFACE FINISH 125
4. DEBURR

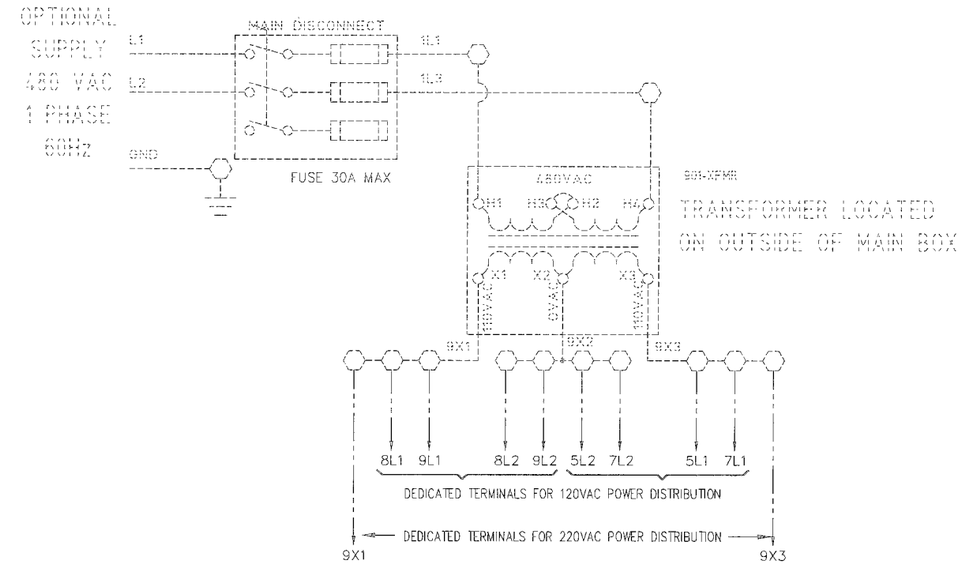

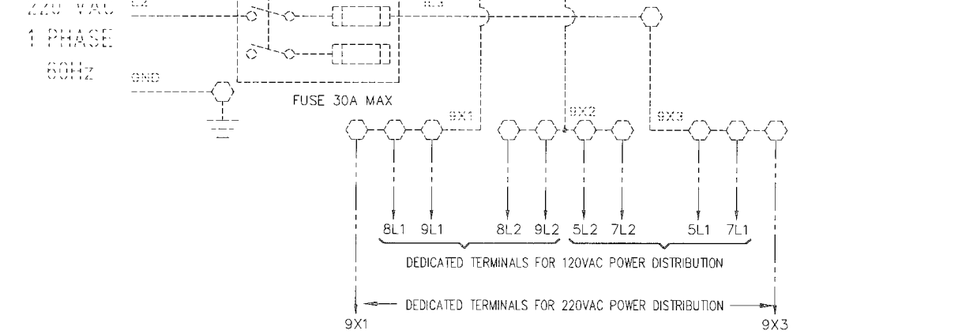

901-CR
5 6 CELL E-STOP CHAIN IF USED

NOTE 1
FIELD UPDATE UNITS WILL HAVE MORE CONNECTORS THAN SHOWN.

† CUSTOMER TO JUMPER IF NOT USING EXTERNAL E-STOP PUSH BUTTON.

ER	DATE	REMARKS		DR	CK
0033	2.09 99	UNPHANTOMED KEYPAD TRANSFORMER REMOVED TERMINALS ON POWER SUPPLY.	E	JPS	
668	10.31 98	ADDED ITEMS 63 , 64 TO PG2	D	MF	
672	9-8 98	CORRECTED BALLOON NUMBERS ON SHEET 2 AND 3	C	MK	
0098	2.16 00	CHANGED BALLON #'S FOR HIGH VOLTAGE OPTION TO RESEMBLE BOM. SHT 3	F	JPS	
0033	2.09 99	CHANGED OPTIONAL STOP CIRCUIT WIRES TO J53 AND J54	E	JPS	
515	8.24 98	SEE PAGE 3 FOR CHANGES	B	SME	
513	6-20 98	CHANGED TERMINAL STRIP ON SHEET 2 AND 3	A	MK	

REVISIONS

MAT'L: SEE B.O.M.

TOLERANCES UNLESS OTHERWISE SPECIFIED
2-DIGIT DECIMALS= ± .010 FRACTIONS= ± 1/64
3-DIGIT DECIMALS= ± .005 ANGLES= ± 1/2
4-DIGIT DECIMALS= ± .0005

RIMROCK CORPORATION
1700 RIMROCK ROAD
COLUMBUS, OHIO 43219
PHONE: 614-471-5926 FAX: 614-471-1073
® A Registered Trademark of Rimrock Corporation, Columbus, Ohio U.S.A.

DR SME DATE 4.6.98 SCALE NONE PIC
CK DATE ER 578 SHEET 1 OF 3
DRAWING NO. 140D11850-01 REV F
DRAWING NAME MAIN PANEL - SCHEMATIC
FOR TRIANGLE SYSTEM

THIS DRAWING IS THE PROPERTY OF RIMROCK CORP. AND IS FOR THE CONFIDENTIAL USE OF THE BUYER OR SUPPLIER OF THIS EQUIPMENT.

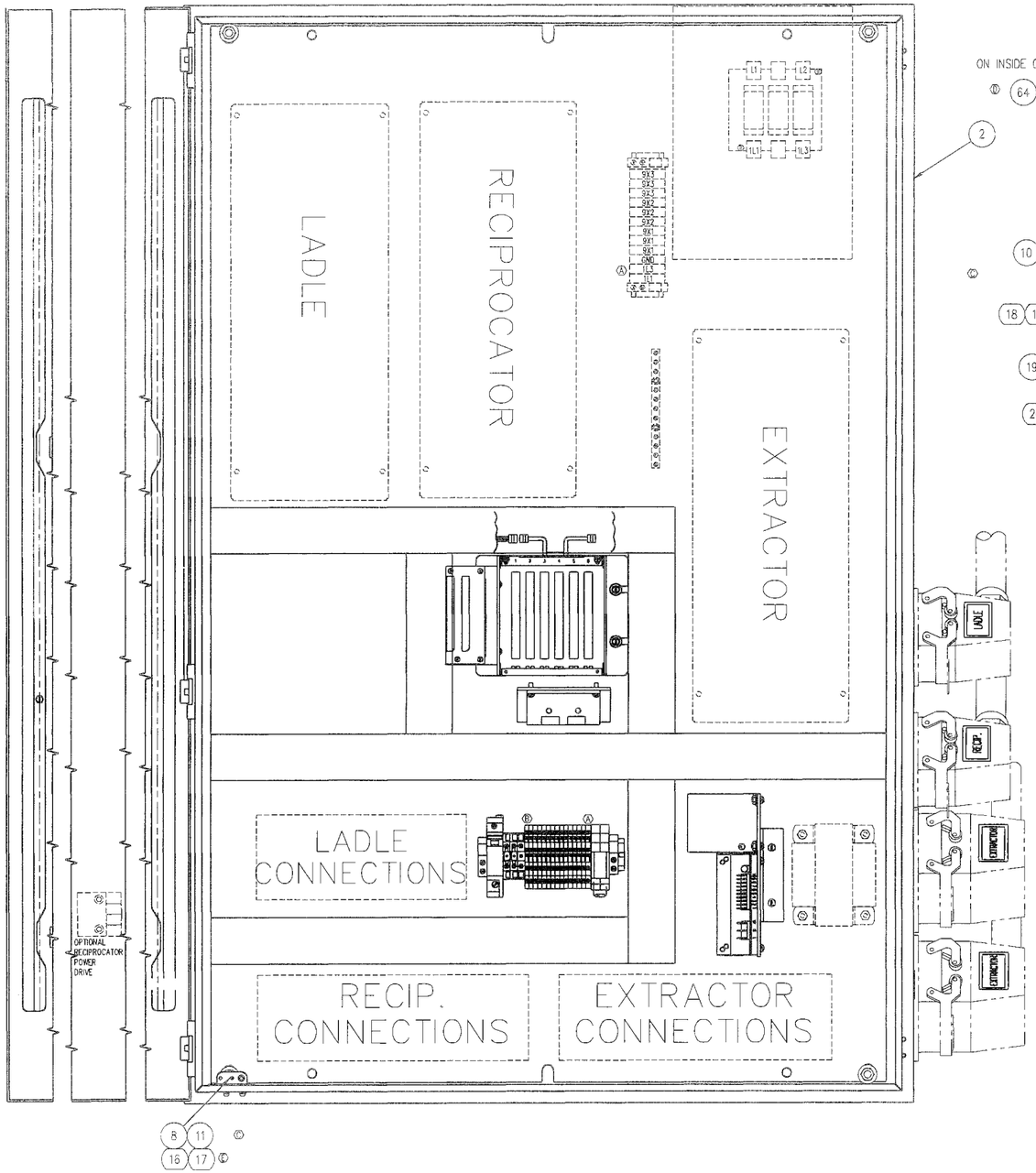

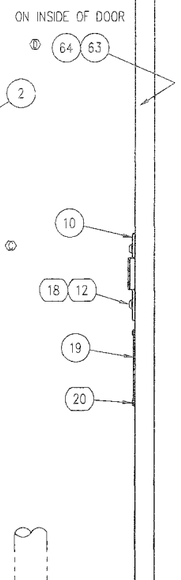

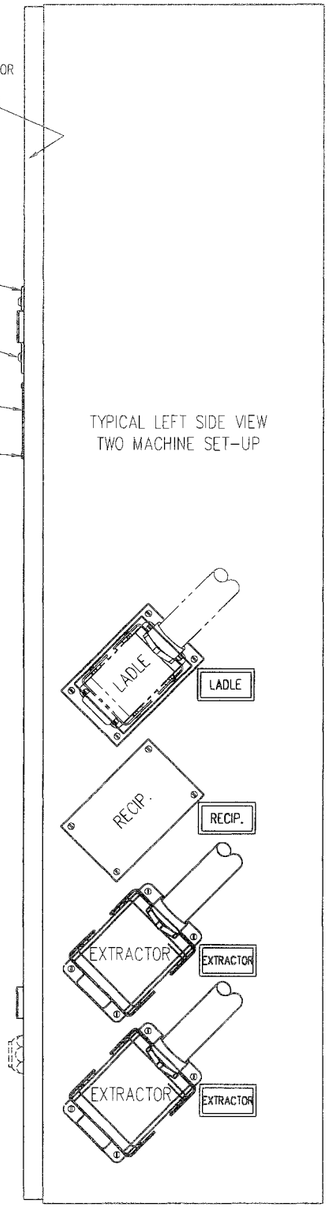

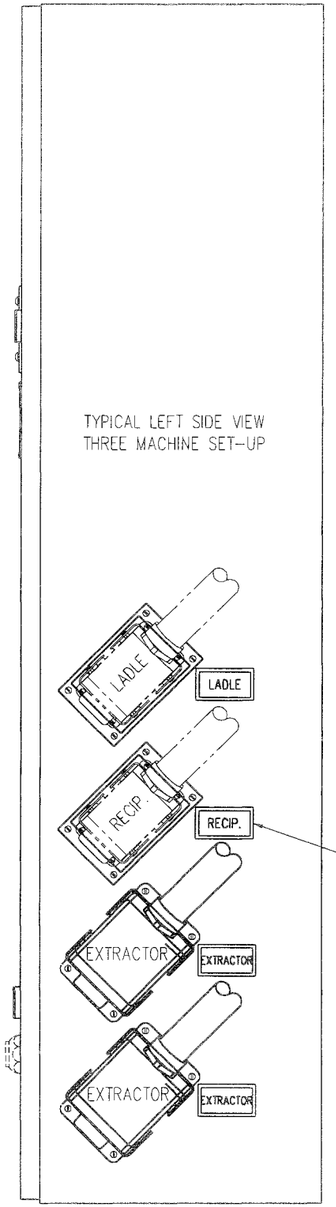

P/N 11850-01

NOTES (UNLESS OTHERWISE SPECIFIED)
1. PARTS TO CONFORM TO RIMROCK CORP. EMCR. & MFG. STANDARDS
2. ALL THREADS CLASS 2A OR 2B
3. SURFACE FINISH 125
4. DEBURR

ER	DATE	REMARKS	LET	DR	CK
0098	2.16 00	CHANGED BALLON #'S FOR HIGH VOLTAGE OPTION TO RESEMBLE BOM. SHT 3	F	JPS	
0033	2.09 99	CHANGED OPTIONAL STOP CIRCUIT WIRES TO #53 AND #54	E	JPS	
0033	2.09 99	UNPHANTOMED KEYPAD TRANSFORMER REMOVED TERMINALS ON POWER SUPPLY.	E	JPS	
868	10.31 98	ADDED ITEMS 63 +64	D	MF	
672	9-8 98	CORRECTED BALLOON NUMBERS	C	MK	
615	8.24 98	ADDED A TERMINAL TO STRIP	B	SMS	
513	6-19 98	CHANGED TERMINAL STRIP AND ADDED TERMINALS TO POWER STRIP	A	MK	

REVISIONS

MATL: SEE B.O.M.

TOLERANCES UNLESS OTHERWISE SPECIFIED
2-DIGIT DECIMALS= ±.010 FRACTIONS= ±1/64
3-DIGIT DECIMALS= ±.005 ANGLES= ±1/2
4-DIGIT DECIMALS= ±.0005

RIMROCK CORPORATION
1700 RIMROCK ROAD
COLUMBUS, OHIO 43219
PHONE: 614-471-5926 FAX: 614-471-1073
* A Registered Trademark of Rimrock Corporation, Columbus, Ohio U.S.A.

DR	SME
DATE	4.6.98
SCALE	1/3
PIC	
CK	
DATE	
ER	578
SHEET	2 OF 3
DRAWING NO.	140D11850-01
REV	F
DRAWING NAME	MAIN BOX ASSEMBLY
FOR	TRIANGLE SYSTEM

THIS DRAWING IS THE PROPERTY OF RIMROCK CORP. AND IS FOR THE CONFIDENTIAL USE OF THE BUYER OR SUPPLIER OF THIS EQUIPMENT.

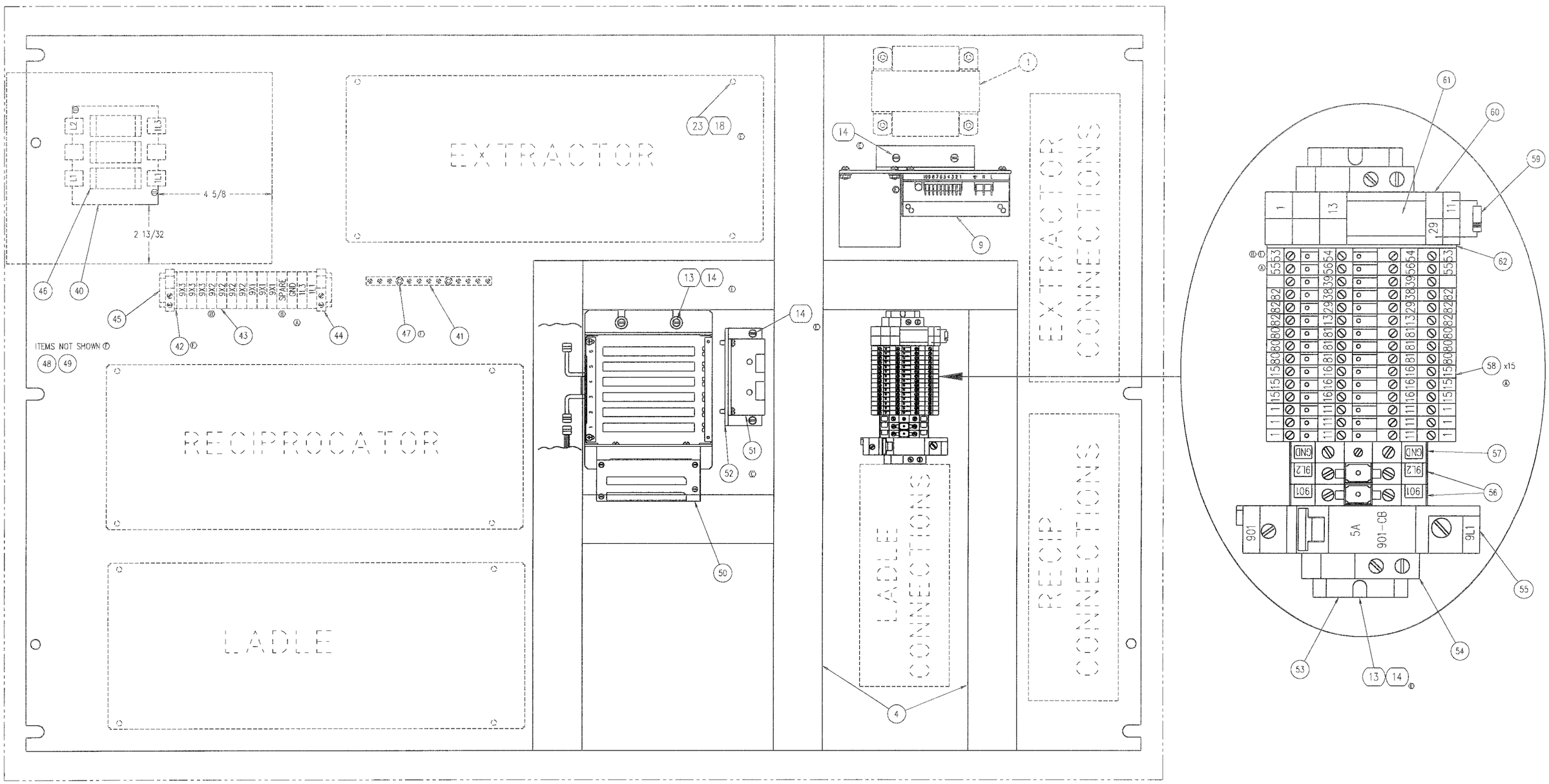

*NOTE: 40 SERIES BALLOON NUMBERS REPRESENT HIGH VOLTAGE OPTION

NOTES (UNLESS OTHERWISE SPECIFIED)
1. PARTS TO CONFORM TO RIMROCK CORP. ENGR. & MFG. STANDARDS
2. ALL THREADS CLASS 2A OR 2B
3. SURFACE FINISH 125
4. DEBURR

ER	DATE	REMARKS	LET	DR	CK
0098	2.16 00	CHANGED BALLON #'S FOR HIGH VOLTAGE OPTION TO RESEMBLE BOM, SHT 3	F	JPS	
0033	2.09 99	CHANGED OPTIONAL STOP CIRCUIT WIRES TO #53 AND #54	E	JPS	
0033	2.09 99	UNPHANTOMED KEYPAD TRANSFORMER REMOVED TERMINALS ON POWER SUPPLY.	E	JPS	
868	10.31 98	ADDED NEW PARTS ON PG2	D	MF	
672	9-8 98	CORRECTED BALLOON NUMBERS	C	MK	
615	8.24 96	ADDED TERMINALS 71 AND 72, ADDED FOURTH '9X2' TERM. TO MATCH SCHEMATIC	B	SMB	
513	6-20 96	CHANGED TERMINAL STRIP AND ADDED TERMINALS TO POWER STRIP	A	MK	

REVISIONS

MAT'L:

RIMROCK CORPORATION
1700 RIMROCK ROAD
COLUMBUS, OHIO 43219
PHONE: 614-471-5826 FAX: 614-471-1073
* A Registered Trademark of Rimrock Corporation, Columbus, Ohio U.S.A.

TOLERANCES UNLESS OTHERWISE SPECIFIED
2-DIGIT DECIMALS= ±.010 FRACTIONS= ± 1/64
3-DIGIT DECIMALS= ± .005 ANGLES= ± 1/2
4-DIGIT DECIMALS= ± .0005

ER SME DATE 4.6.98 SCALE 1/2 PIC
CK DATE ER 578 SHEET 3 OF 3
DRAWING NO. 140D11850-01 REV F
DRAWING NAME PANEL LAYOUT
FOR TRIANGLE SYSTEM

THIS DRAWING IS THE PROPERTY OF RIMROCK CORP. AND IS FOR THE CONFIDENTIAL USE OF THE BUYER OR SUPPLIER OF THIS EQUIPMENT.

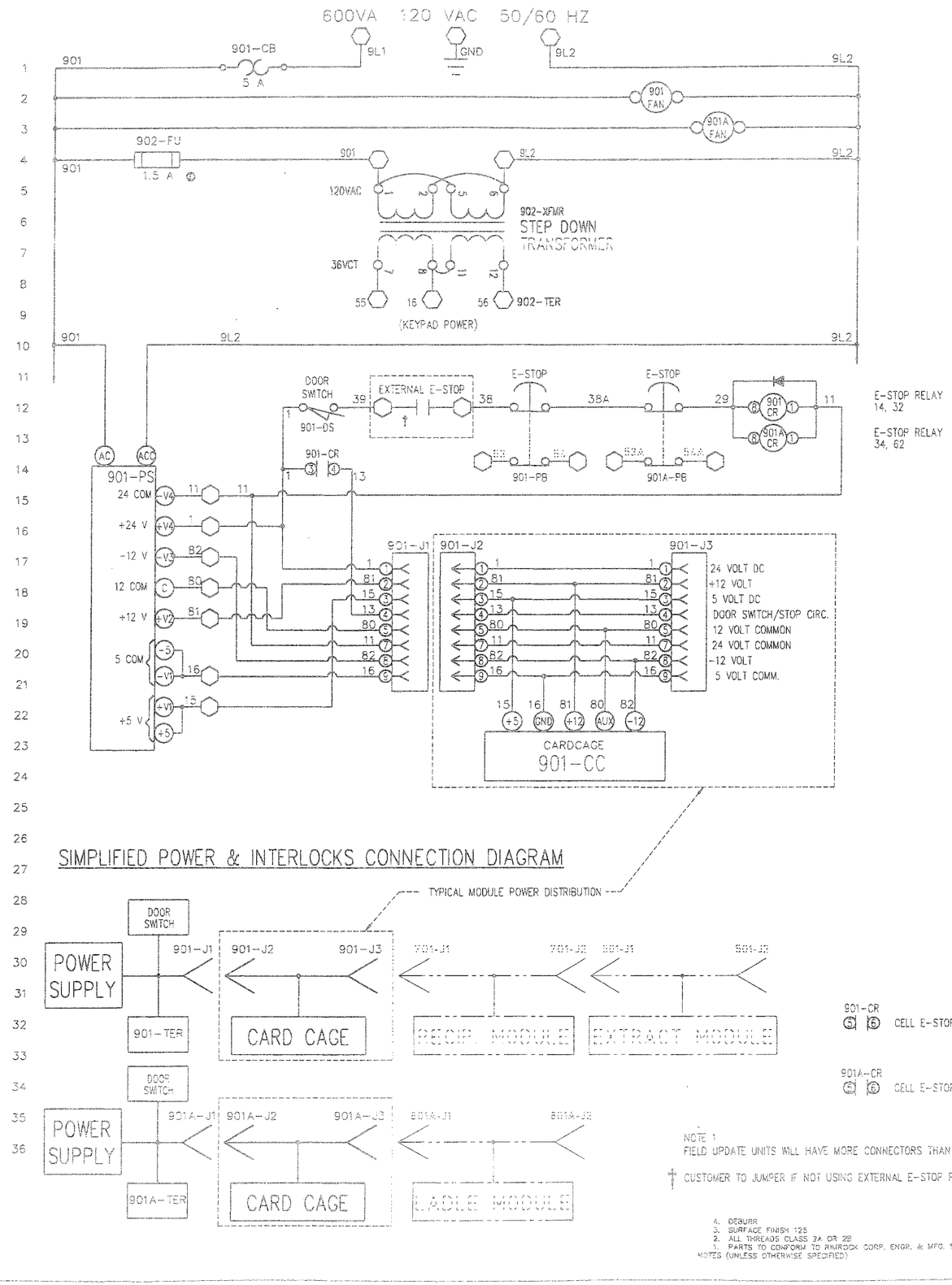

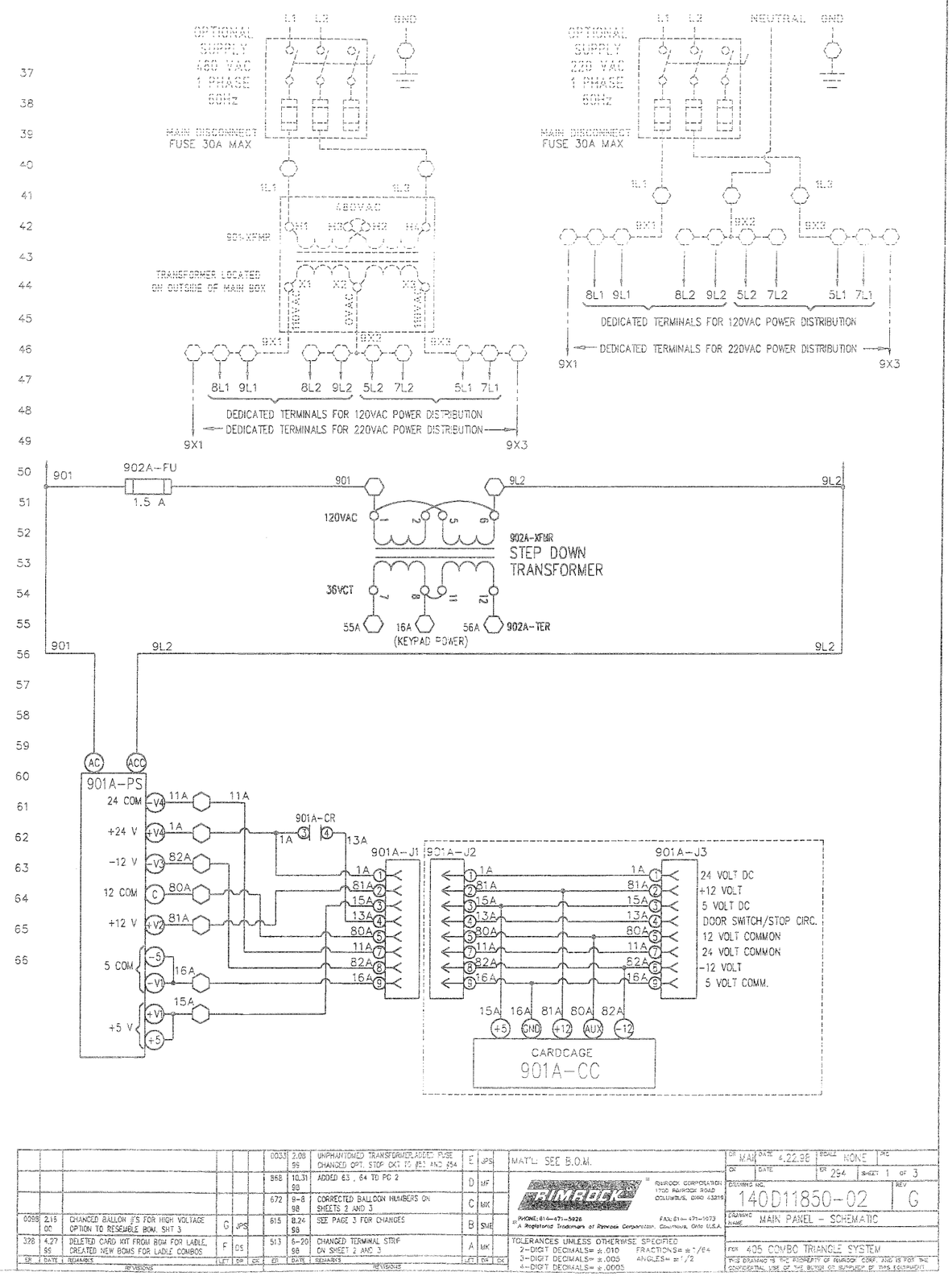

						0033	2.08 99	UNIPHANTOMED TRANSFORMER, ADDED FUSE CHANGED OPT. STOP CKT TO #61 AND #54	E	JPS
						868	10.31 98	ADDED 63 , 64 TO PG 2	D	MF
						672	9-8 98	CORRECTED BALLOON NUMBERS ON SHEETS 2 AND 3	C	MK
0098	2.16 DC	CHANGED BALLON #'S FOR HIGH VOLTAGE OPTION TO RESEMBLE BOM. SHT 3	C	JPS		615	8.24 98	SEE PAGE 3 FOR CHANGES	B	SME
328	4.27 96	DELETED CARD KIT FROM BOM FOR LADLE, CREATED NEW BOMS FOR LADLE COMBOS	F	DS		513	8-20 98	CHANGED TERMINAL STRIP ON SHEET 2 AND 3	A	MK
ER	DATE	REMARKS	LET	DR	CK	ER	DATE	REMARKS	LET	DR	CK
REVISIONS						REVISIONS					

MAT'L SEE B.O.M.

RINROCK CORPORATION
1700 RAINROCK ROAD
COLUMBUS, OHIO 43219
PHONE: 614-471-5926
FAX: 614-471-1073
A Registered Trademark of Rainrock Corporation, Columbus, Ohio U.S.A.

TOLERANCES UNLESS OTHERWISE SPECIFIED
2-DIGIT DECIMALS= ±.010 FRACTIONS= ±1/64
3-DIGIT DECIMALS= ±.005 ANGLES= ±1/2
4-DIGIT DECIMALS= ±.0005

DR	MAK	DATE	4.22.96
CK		DATE	
SCALE	NONE	WT	
ER	294	SHEET	1 OF 3

DRAWING NO. 140D11850-02 REV G

DRAWING NAME MAIN PANEL - SCHEMATIC

FOR 405 COVBC TRIANGLE SYSTEM

THIS DRAWING IS THE PROPERTY OF RAINROCK CORP. AND IS FOR THE CONFIDENTIAL USE OF THE BUYER OR SUPPLIER OF THIS EQUIPMENT

CARD CAGE CABLE CONNECTIONS

NOTE: COMBINATIONS WITH 400 SERIES LADLE AND 400 SERIES EXTRACTOR ON SHEET 2 OF 2.

	RIMROCK MACHINE CONFIGURATIONS			CARD SETS PART NUMBERS	195 SERIES EXTRACTOR: DIGITAL I/O RACK #1 RIBBON CABLE #1 11083-04	195 SERIES EXTRACTOR: DIGITAL I/O RACK #2 RIBBON CABLE #2 11083-04	195 SERIES EXTRACTOR: DIGITAL I/O RACK #3 (OPT. SYS II) RIBBON CABLE #3 11083-04	195 SERIES EXTRACTOR: REMOTE PUSH BUTTON RIBBON CABLE 11084-06	300 SERIES LADLE: MOTOR CONTROLLER/REM. PB RIBBON CABLE 11084-06	300 SERIES LADLE: ARM ENCODER CABLE 11450-20	300 SERIES LADLE: DIPPER ENCODER CABLE 11450-20	300 SERIES LADLE: DIGITAL I/O RACK #1 RIBBON CABLE 11083-04	300 SERIES RECIP.: MOTOR CONTROLLER/REM. PB RIBBON CABLE 11084-06	300 SERIES RECIP.: ARM ENCODER CABLE 11450-21	300 SERIES RECIP.: DIGITAL I/O RACK #1 RIBBON CABLE 11083-04	300 SERIES EXT.: MOTOR CONTROLLER/REM. PB RIBBON CABLE 11084-06	300 SERIES EXT.: DIGITAL I/O RACK #1 RIBBON CABLE 11083-04	300 SERIES EXT.: DIGITAL I/O RACK #2 RIBBON CABLE 11083-04	400 SERIES RECIP.: SERVO IC PCB BOARD JP1 CABLE ASSY. 11450-29, 11450-129	400 SERIES RECIP.: DIGITAL I/O RACK #1 RIBBON CABLE 11083-04	400 SERIES RECIP.: REMOTE PUSH BUTTON RIBBON CABLE 11084-06	400 SERIES EXT.: SERVO IC PCB BOARD JP1 CABLE ASSY. 11910-11	400 SERIES EXT.: DIGITAL I/O RACK #1 RIBBON CABLE 11083-04	400 SERIES EXT.: DIGITAL I/O RACK #2 RIBBON CABLE 11083-04	400 SERIES EXT.: REMOTE PUSH BUTTON RIBBON CABLE 11084-06	400 SERIES LADLE: SERVO IC PCB BOARD JP1 CABLE ASSY. 11750, 11850-20	400 SERIES LADLE: DIGITAL I/O RACK #1 RIBBON CABLE 11083-05	400 SERIES LADLE: REMOTE PUSH BUTTON RIBBON CABLE 11084-06	MODULE POWER CONNECTIONS
SINGLE MACHINES SEE DWG 140D11850-01 OR 140D11850-121	195 SERIES EXTRACTOR	BOARD CONNECTOR	CPU-4	11450-300	DBO-1 J2	DBO-1 J1	DIG-1 J2	DIG-1 J1																				901-J1 TO 901-J2 901-J3 TO 501-J1
	300 SERIES LADLE	BOARD CONNECTOR	CPU-4	11450-301					DBO-1 J1	ENC J2	ENC J3	DBO-1 J2																901-J1 TO 901-J2 901-J3 TO 801-J1
	300 SERIES RECIP.	BOARD CONNECTOR	CPU-4	11450-302									DBO-1 J1	ENC J4	DBO-1 J2													901-J1 TO 901-J2 901-J3 TO 701-J1
	300 SERIES EXTRACTOR	BOARD CONNECTOR	CPU-4	11450-303												DIG-1 J1	DBO-1 J2	DBO-1 J1										901-J1 TO 901-J2 901-J3 TO 501-J1
	400 SERIES LADLE	BOARD CONNECTOR	CPU-4	11450-304																					SRV-2 J1	DBO-1 J2	DBO-1 J1	901-J1 TO 901-J2 901-J3 TO 801-J1
	400 SERIES RECIP.	BOARD CONNECTOR	CPU-4	11450-305															SRV-1 J1	DBO-1 J2	DBO-1 J1							901-J1 TO 901-J2 901-J3 TO 701-J1
	400 SERIES EXTRACTOR	BOARD CONNECTOR	CPU-4	11450-306																		SRV-2 J1	DBO-1 J2	DBO-1 J1	DIG-1 J1			901-J1 TO 901-J2 901-J3 TO 501-J1
COMBINATIONS WITH NO EXTRACTOR	300 SERIES LADLE 300 SERIES RECIP.	BOARD CONNECTOR	CPU-4	11450-307					DBO-1 J1	ENC J2	ENC J3	DBO-1 J2	DIG-1 J2	ENC J4	DIG-1 J1													901-J1 TO 901-J2 901-J3 TO 801-J1 801-J2 TO 701-J1
	300 SERIES LADLE 400 SERIES RECIP.	BOARD CONNECTOR	CPU-4	11450-308					DBO-1 J1	ENC J2	ENC J3	DBO-1 J2							SRV-1 J1	DIG-1 J1	DIG-1 J2							901-J1 TO 901-J2 901-J3 TO 801-J1 801-J2 TO 701-J1
COMBINATIONS WITH 195 SERIES EXTRACTOR SEE DWG 140D11850-01 OR 140D11850-121	195 SERIES EXTRACTOR 300 SERIES RECIP.	BOARD CONNECTOR	CPU-4	11450-309	DIG-1 J1	DIG-1 J2	DIG-2 J2	DIG-2 J1					DBO-1 J1	ENC J4	DBO-1 J2													901-J1 TO 901-J2 901-J3 TO 701-J1 701-J2 TO 501-J1
	195 SERIES EXTRACTOR 400 SERIES RECIP.	BOARD CONNECTOR	CPU-4	11450-310	DIG-1 J1	DIG-1 J2	DIG-2 J2	DIG-2 J1											SRV-1 J1	DBO-1 J2	DBO-1 J1							901-J1 TO 901-J2 901-J3 TO 701-J1 701-J2 TO 501-J1
	195 SERIES EXTRACTOR 300 SERIES LADLE	BOARD CONNECTOR	CPU-4	11450-311	DIG-1 J1	DIG-1 J2	DIG-2 J2	DIG-2 J1	DBO-1 J1	ENC J2	ENC J3	DBO-1 J2																901-J1 TO 901-J2 901-J3 TO 801-J1 801-J2 TO 501-J1
	195 SERIES EXTRACTOR 300 SERIES LADLE 300 SERIES RECIP.	BOARD CONNECTOR	CPU-4	11450-312	DIG-4 J3	DIG-4 J4	DIG-4 J6	DIG-4 J5	DBO-1 J1	ENC J2	ENC J3	DBO-1 J2	DIG-4 J2	ENC J4	DIG-4 J1													901-J1 TO 901-J2 901-J3 TO 801-J1 801-J2 TO 701-J1 701-J2 TO 501-J1
	195 SERIES EXTRACTOR 300 SERIES LADLE 400 SERIES RECIP.	BOARD CONNECTOR	CPU-4	11450-313	DIG-4 J3	DIG-4 J4	DIG-4 J6	DIG-4 J5	DBO-1 J1	ENC J2	ENC J3	DBO-1 J2							SRV-1 J1	DIG-4 J1	DIG-4 J2							901-J1 TO 901-J2 901-J3 TO 801-J1 801-J2 TO 701-J1 701-J2 TO 501-J1
COMBINATIONS WITH 300 SERIES EXTRACTOR SEE DWG 140D11850-01 OR 140D11850-121	300 SERIES EXTRACTOR 300 SERIES RECIP.	BOARD CONNECTOR	CPU-4	11450-314									DBO-1 J1	ENC J4	DBO-1 J2	DIG-2 J1	DIG-1 J1	DIG-1 J2										901-J1 TO 901-J2 901-J3 TO 701-J1 701-J2 TO 501-J1
	300 SERIES EXTRACTOR 400 SERIES RECIP.	BOARD CONNECTOR	CPU-4	11450-315												DIG-2 J1	DIG-1 J1	DIG-1 J2	SRV-1 J1	DBO-1 J2	DBO-1 J1							901-J1 TO 901-J2 901-J3 TO 701-J1 701-J2 TO 501-J1
	300 SERIES EXTRACTOR 300 SERIES LADLE	BOARD CONNECTOR	CPU-4	11450-316					DBO-1 J1	ENC J2	ENC J3	DBO-1 J2				DIG-2 J1	DIG-1 J1	DIG-1 J2										901-J1 TO 901-J2 901-J3 TO 801-J1 801-J2 TO 501-J1
	300 SERIES EXTRACTOR 300 SERIES LADLE 300 SERIES RECIP.	BOARD CONNECTOR	CPU-4	11450-317					DBO-1 J1	ENC J2	ENC J3	DBO-1 J2	DIG-4 J2	ENC J4	DIG-4 J1	DIG-4 J5	DIG-4 J3	DIG-4 J4										901-J1 TO 901-J2 901-J3 TO 801-J1 801-J2 TO 701-J1 701-J2 TO 501-J1
	300 SERIES EXTRACTOR 300 SERIES LADLE 400 SERIES RECIP.	BOARD CONNECTOR	CPU-4	11450-318					DBO-1 J1	ENC J2	ENC J3	DBO-1 J2				DIG-4 J5	DIG-4 J3	DIG-4 J4	SRV-1 J1	DIG-4 J1	DIG-4 J2							901-J1 TO 901-J2 901-J3 TO 801-J1 801-J2 TO 701-J1 701-J2 TO 501-J1

RIMROCK MACHINES CONFIG'S	CARD LOCATION IN CAGE: 901-CAGE	902-CAGE	903-CAGE	904-CAGE	905-CAGE	906-CAGE	907-CAGE
195E	DBO-1	CPU-4		DIG-1			
300L	DBO-1	CPU-4					ENC
300R	DBO-1	CPU-4		DIG-1			ENC
300E	DBO-1	CPU-4		DIG-1			ENC
400L	DBO-1	CPU-4					SRV-2
400R	DBO-1	CPU-4					SRV-1
400E	DBO-1	CPU-4		DIG-1			SRV-2
300L, 300R	DBO-1	CPU-4		DIG-1			ENC
300L, 400R	DBO-1	CPU-4		DIG-1		ENC	SRV-1
195E, 300R	DBO-1	CPU-4		DIG-1	DIG-2		ENC

RIMROCK MACHINES CONFIG'S	CARD LOCATION IN CAGE: 901-CAGE	902-CAGE	903-CAGE	904-CAGE	905-CAGE	906-CAGE	907-CAGE
195E, 400R	DBO-1	CPU-4		DIG-1	DIG-2		SRV-1
195E, 300L	DBO-1	CPU-4		DIG-1	DIG-2		ENC
195E, 300L, 300R	DBO-1	CPU-4		DIG-4			ENC
195E, 300L, 400R	DBO-1	CPU-4		DIG-4		ENC	SRV-1
300E, 300R	DBO-1	CPU-4		DIG-1	DIG-2		ENC
300E, 400R	DBO-1	CPU-4		DIG-1	DIG-2		SRV-1
300E, 300L	DBO-1	CPU-4		DIG-1	DIG-2		ENC
300E, 300L, 300R	DBO-1	CPU-4		DIG-4			ENC
300E, 300L, 400R	DBO-1	CPU-4		DIG-4		ENC	SRV-1

NOTE: CARD LOCATION NOT CRITICAL, SHOWN ONLY AS GUIDELINE.

4. DEBURR
3. SURFACE FINISH 125
2. ALL THREADS CLASS 2A OR 2B
1. PARTS TO CONFORM TO RIMROCK CORP. ENGR. & MFG. STANDARDS

NOTES (UNLESS OTHERWISE SPECIFIED)

NOTE: REF DRAWING NO. 140D11850-01 AND 140D11850-02 FOR SCHEMATIC AND LAYOUT.
(REF DRAWING NO. 140D11850-121 AND 140D11850-122 FOR CANADIAN ORDERS)

NOTE: REF DRAWING NO. 140D11850-123 FOR HEAT SINK MODIFICATION FOR 400 SERIES SYSTEM CONFIGURATION (SERVO DRIVE SHUNT RESISTOR HEAT SINK)

REVISIONS														
DR	DATE	REMARKS	LET	DR	CK	ER	DATE	REMARKS	LET	DR	CK
						0579	2.21 00	ADDED HEAT SINK FOR RESISTOR MTG FOR ALL SERVO DRIVE CARD SET BOMS	C	DWS	
						0744	1.04 00	UPDATED QUANTITIES ON BOMS	B	JPS	
						0328	4.27 99	ADDED 400 SERIES LADLE CONNECTIONS ON SHEET 2, UPDATED CPU	A	DS	

MATL:

RIMROCK CORPORATION
1700 RIMROCK ROAD
COLUMBUS, OHIO 43219
PHONE: 614-471-5928 FAX: 614-471-1073
* A Registered Trademark of Rimrock Corporation, Columbus, Ohio U.S.A.

TOLERANCES UNLESS OTHERWISE SPECIFIED
2-DIGIT DECIMALS= ±.010 FRACTIONS= ±1/64
3-DIGIT DECIMALS= ±.005 ANGLES= ±1/2
4-DIGIT DECIMALS= ±.0005

DR SMB DATE 4.6.98 SCALE NONE PIC
CK DATE DR 578 SHEET 1 OF 2
DRAWING NO. 140D11850-100 REV C
DRAWING NAME TRIANGLE INTERCONNECTIONS
TABLE
FOR TRIANGLE CONTROLS

THIS DRAWING IS THE PROPERTY OF RIMROCK CORP. AND IS FOR THE CONFIDENTIAL USE OF THE BUYER OR SUPPLIER OF THIS EQUIPMENT.

CARD CAGE CABLE CONNECTIONS

	RIMROCK MACHINE CONFIGURATIONS			CARD SETS PART NUMBERS	195 SERIES EXTRACTOR: DIGITAL I/O RACK #1 RIBBON CABLE #1 11083-04	195 SERIES EXTRACTOR: DIGITAL I/O RACK #2 RIBBON CABLE #2 11083-04	195 SERIES EXTRACTOR: DIGITAL I/O RACK #3 (OPT. SYS II) RIBBON CABLE #3 11083-04	195 SERIES EXTRACTOR: REMOTE PUSH BUTTON RIBBON CABLE 11084-06	300 SERIES LADLE: MOTOR CONTROLLER/REM. PB RIBBON CABLE 11084-06	300 SERIES LADLE: ARM ENCODER CABLE 11450-20	300 SERIES LADLE: DIPPER ENCODER CABLE 11450-20	300 SERIES LADLE: DIGITAL I/O RACK #1 RIBBON CABLE 11083-04	300 SERIES RECIP.: MOTOR CONTROLLER/REM. PB RIBBON CABLE 11084-06	300 SERIES RECIP.: ARM ENCODER CABLE 11450-21	300 SERIES RECIP.: DIGITAL I/O RACK #1 RIBBON CABLE 11083-04	300 SERIES EXT.: MOTOR CONTROLLER/REM. PB RIBBON CABLE 11084-06	300 SERIES EXT.: DIGITAL I/O RACK #1 RIBBON CABLE 11083-04	300 SERIES EXT.: DIGITAL I/O RACK #2 RIBBON CABLE 11083-04	400 SERIES RECIP.: SERVO IC PCB BOARD JP1 CABLE ASSY. 11450-29, 11450-123	400 SERIES RECIP.: DIGITAL I/O RACK #1 RIBBON CABLE 11083-04	400 SERIES RECIP.: REMOTE PUSH BUTTON RIBBON CABLE 11084-06	400 SERIES EXT.: SERVO IC PCB BOARD JP1 CABLE ASSY. 11910-11	400 SERIES EXT.: DIGITAL I/O RACK #1 RIBBON CABLE 11083-04	400 SERIES EXT.: DIGITAL I/O RACK #2 RIBBON CABLE 11083-04	400 SERIES EXT.: REMOTE PUSH BUTTON RIBBON CABLE 11084-06	400 SERIES LADLE: SERVO IC PCB BOARD JP1 CABLE ASSY. 11750, 11850-20	400 SERIES LADLE: DIGITAL I/O RACK #1 RIBBON CABLE 11083-05	400 SERIES LADLE: REMOTE PUSH BUTTON RIBBON CABLE 11084-06	MODULE POWER CONNECTIONS
COMBINATIONS WITH 400 SERIES EXTRACTOR SEE DWG 140D11850-01 OR 140D11850-121	400 SERIES EXTRACTOR 300 SERIES LADLE	BOARD CONNECTOR	CPU-4	11450-319					DBO-1 J1	ENC J2	ENC J3	DBO-1 J2										SRV-2 J1	DIG-1 J1	DIG-1 J2	DIG-2 J1					901-J1 TO 901-J2 901-J3 TO 801-J1 801-J2 TO 501-J1
	400 SERIES EXTRACTOR 300 SERIES RECIP.	BOARD CONNECTOR	CPU-4	11450-320									DBO-1 J1	ENC J4	DBO-1 J2							SRV-2 J1	DIG-1 J1	DIG-1 J2	DIG-2 J1					901-J1 TO 901-J2 901-J3 TO 701-J1 701-J2 TO 501-J1
	400 SERIES EXTRACTOR 400 SERIES RECIP.	BOARD CONNECTOR	CPU-4	11450-321													SRV-4 J1	DBO-1 J2	DBO-1 J1			SRV-4 J2	DIG-1 J1	DIG-1 J2	DIG-2 J1					901-J1 TO 901-J2 901-J3 TO 701-J1 701-J2 TO 501-J1
	400 SERIES EXTRACTOR 300 SERIES LADLE 400 SERIES RECIP.	BOARD CONNECTOR	CPU-4	11450-322					DBO-1 J1	ENC J2	ENC J3	DBO-1 J2					SRV-4 J1	DIG-4 J1	DIG-4 J2			SRV-4 J2	DIG-4 J3	DIG-4 J4	DIG-4 J5					901-J1 TO 901-J2 901-J3 TO 801-J1 801-J2 TO 701-J1 701-J2 TO 501-J1
	400 SERIES EXTRACTOR 300 SERIES LADLE 300 SERIES RECIP.	BOARD CONNECTOR	CPU-4	11450-323					DBO-1 J1	ENC J2	ENC J3	DBO-1 J2	DIG-4 J2	ENC J4	DIG-4 J1							SRV-2 J1	DIG-4 J3	DIG-4 J4	DIG-4 J5					901-J1 TO 901-J2 901-J3 TO 801-J1 801-J2 TO 501-J1 701-J2 TO 501-J1
COMBINATIONS WITH 400 SERIES LADLE SEE DWG 140D11850-02 OR 140D11850-122 (400 SERIES LADLE CARDS IN SEPARATE RACK)	400 SERIES LADLE 195 SERIES EXTRACTOR	BOARD CONNECTOR	CPU-4	11450-324	DBO-1 J2	DBO-1 J1	DIG-1 J2	DIG-1 J1																		SRV-2 J1	DBO-2 J2	DBO-2 J1	901-J1 TO 901-J2 901A-J1 TO 901A-J2 901A-J3 TO 801A-J1 901-J3 TO 501-J1
	400 SERIES LADLE 300 SERIES RECIP.	BOARD CONNECTOR	CPU-4	11450-325									DBO-1 J1	ENC J4	DBO-1 J2											SRV-2 J1	DBO-2 J2	DBO-2 J1	901-J1 TO 901-J2 901A-J1 TO 901A-J2 901A-J3 TO 801A-J1 901-J3 TO 701-J1
	400 SERIES LADLE 300 SERIES EXTRACTOR	BOARD CONNECTOR	CPU-4	11450-326												DIG-1 J1	DBO-1 J2	DBO-1 J1								SRV-2 J1	DBO-2 J2	DBO-2 J1	901-J1 TO 901-J2 901A-J1 TO 901A-J2 901A-J3 TO 801A-J1 901-J3 TO 501-J1
	400 SERIES LADLE 400 SERIES RECIP.	BOARD CONNECTOR	CPU-4	11450-327													SRV-1 J1	DBO-1 J2	DBO-1 J1							SRV-2 J1	DBO-2 J2	DBO-2 J1	901-J1 TO 901-J2 901A-J1 TO 901A-J2 901A-J3 TO 801A-J1 901-J3 TO 701-J1
	400 SERIES LADLE 400 SERIES RECIP. 195 SERIES EXTRACTOR	BOARD CONNECTOR	CPU-4	11450-328	DIG-1 J1	DIG-1 J2	DIG-2 J2	DIG-2 J1									SRV-1 J1	DBO-1 J2	DBO-1 J1							SRV-2 J1	DBO-2 J2	DBO-2 J1	901-J1 TO 901-J2 901A-J1 TO 901A-J2 901A-J3 TO 801A-J1 901-J3 TO 701-J1 701-J2 TO 501-J1
	400 SERIES LADLE 300 SERIES EXTRACTOR 300 SERIES RECIP.	BOARD CONNECTOR	CPU-4	11450-329									DBO-1 J1	ENC J4	DBO-1 J2	DIG-2 J1	DIG-1 J2	DIG-1 J1								SRV-2 J1	DBO-2 J2	DBO-2 J1	901-J1 TO 901-J2 901A-J1 TO 901A-J2 901A-J3 TO 801A-J1 901-J3 TO 701-J1 701-J2 TO 501-J1

SERIES	MACHINE TYPE
300 SERIES LADLES	305,305H,352,358
300 SERIES RECIP.S	310,310H
300 SERIES EXTRACTORS	320,322,324,340,344
400 SERIES LADLES	405,456,457,458
400 SERIES RECIP.S	410,410H
400 SERIES EXTRACTORS	495

NOTE: REF DRAWING NO. 140D11850-01 AND 140D11850-02 FOR SCHEMATIC AND LAYOUT. (REF DRAWING NO. 140D11850-121 AND 140D11850-122 FOR CANADIAN ORDERS)

NOTE: REF DRAWING NO. 140D11850-123 FOR HEAT SINK MODIFICATION FOR 400 SERIES SYSTEM CONFIGURATION (SERVO DRIVE SHUNT RESISTOR HEAT SINK)

OPERATOR INTERFACE CABLE CONNECTIONS	
KEYPAD / VIDEO	CPU-4 J8
MESSAGE CENTER	CPU-4 J10

*NOTE: DIGITAL BREAKOUT I/O BOARD CONNECTS TO CPU-4 WITH 60 PIN RIBBON CABLE FROM (DBO-1 J3) TO (CPU-4 J4)

CARD	CARD DESCRIPTION	PART NUMBER
CPU-4	CENTRAL PROCSSOR UNIT	11440-10
DBO-1	DIGITAL BREAKOUT I/O	11440-11
DBO-2	DIGITAL BREAKOUT I/O	11440-11
DIG-1	DIGITAL I/O	11441-01
DIG-2	DIGITAL I/O	11441-01
DIG-3	DIGITAL I/O	11441-01
DIG-4	DIGITAL I/O 144	11441-02
ENC	ENCODER	11442-03
SRV-1	SERVO CARD 7340-01	11442-11A
SRV-2	SERVO CARD 7340-02	11442-12A
SRV-4	SERVO CARD 7340-04	11442-14A

RIMROCK MACHINES CONFIG'S	CARD LOCATION IN CAGE 901-CAGE	902-CAGE	903-CAGE	904-CAGE	905-CAGE	906-CAGE	907-CAGE
400E, 300L	DBO-1	CPU-4		DIG-1	DIG-2	ENC	SRV-2
400E, 300R	DBO-1	CPU-4		DIG-1	DIG-2	ENC	SRV-2
400E, 400R	DBO-1	CPU-4		DIG-1	DIG-2		SRV-4
400E, 300L, 400R	DBO-1	CPU-4		DIG-4		ENC	SRV-4
400E, 300L, 300R	DBO-1	CPU-4		DIG-4		ENC	SRV-2

RIMROCK MACHINES CONFIG'S	CARD LOCATION IN CAGE (901-CC) 901-CAGE	902-CAGE	903-CAGE	904-CAGE	905-CAGE	906-CAGE	907-CAGE	CAGE (901A-CC) 901A-CAGE	902A-CAGE	907A-CAGE
405, 195E	DBO-1	CPU-4		DIG-1				DBO-2	CPU-4	SRV-2
405, 300R	DBO-1	CPU-4					ENC	DBO-2	CPU-4	SRV-2
405, 300E	DBO-1	CPU-4		DIG-1				DBO-2	CPU-4	SRV-2
405, 400R	DBO-1	CPU-4					SRV-1	DBO-2	CPU-4	SRV-2
405, 195E, 400R	DBO-1	CPU-4		DIG-1	DIG-2		SRV-1	DBO-2	CPU-4	SRV-2
405, 300R, 300E	DBO-1	CPU-4		DIG-1	DIG-2		ENC	DBO-2	CPU-4	SRV-2

NOTE: CARD LOCATION NOT CRITICAL, SHOWN ONLY AS GUIDELINE.

NOTES (UNLESS OTHERWISE SPECIFIED)
1. PARTS TO CONFORM TO RIMROCK CORP. ENGR. & MFG. STANDARDS
2. ALL THREADS CLASS 2A OR 2B
3. SURFACE FINISH 125
4. DEBURR

REVISIONS ER	DATE	REMARKS	LET	DR	CK
0679	2.21 00	ADDED HEAT SINK MOD FOR RESISTORS ON ALL SERVO DRIVE CARD SET BOMS	C	DWS	
0744	1.04 00	UPDATED QUANTITIES ON BOMS	B	JPS	
0328	4.27 99	ADDED 400 SERIES LADLE CONNECTIONS, UPDATED CPU.	A	DS	

MATL:

RIMROCK CORPORATION 1700 RIMROCK ROAD COLUMBUS, OHIO 43219
PHONE: 614-471-5026 FAX: 614-471-1073
® A Registered Trademark of Rimrock Corporation, Columbus, Ohio U.S.A.

TOLERANCES UNLESS OTHERWISE SPECIFIED
2-DIGIT DECIMALS= ±.010 FRACTIONS= ± 1/64
3-DIGIT DECIMALS= ±.005 ANGLES= ±1/2
4-DIGIT DECIMALS= ±.0005

THIS DRAWING IS THE PROPERTY OF RIMROCK CORP. AND IS FOR THE CONFIDENTIAL USE OF THE BUYER OR SUPPLIER OF THIS EQUIPMENT

DR	SME
DATE	4.7.98
SCALE	NTS
PIC	
CK	
DATE	
ER	578
SHEET	2 OF 2
DRAWING NO.	140D11850-100
REV	C
DRAWING NAME	TRIANGLE INTERCONNECTIONS TABLE
FOR	TRIANGLE SYSTEM

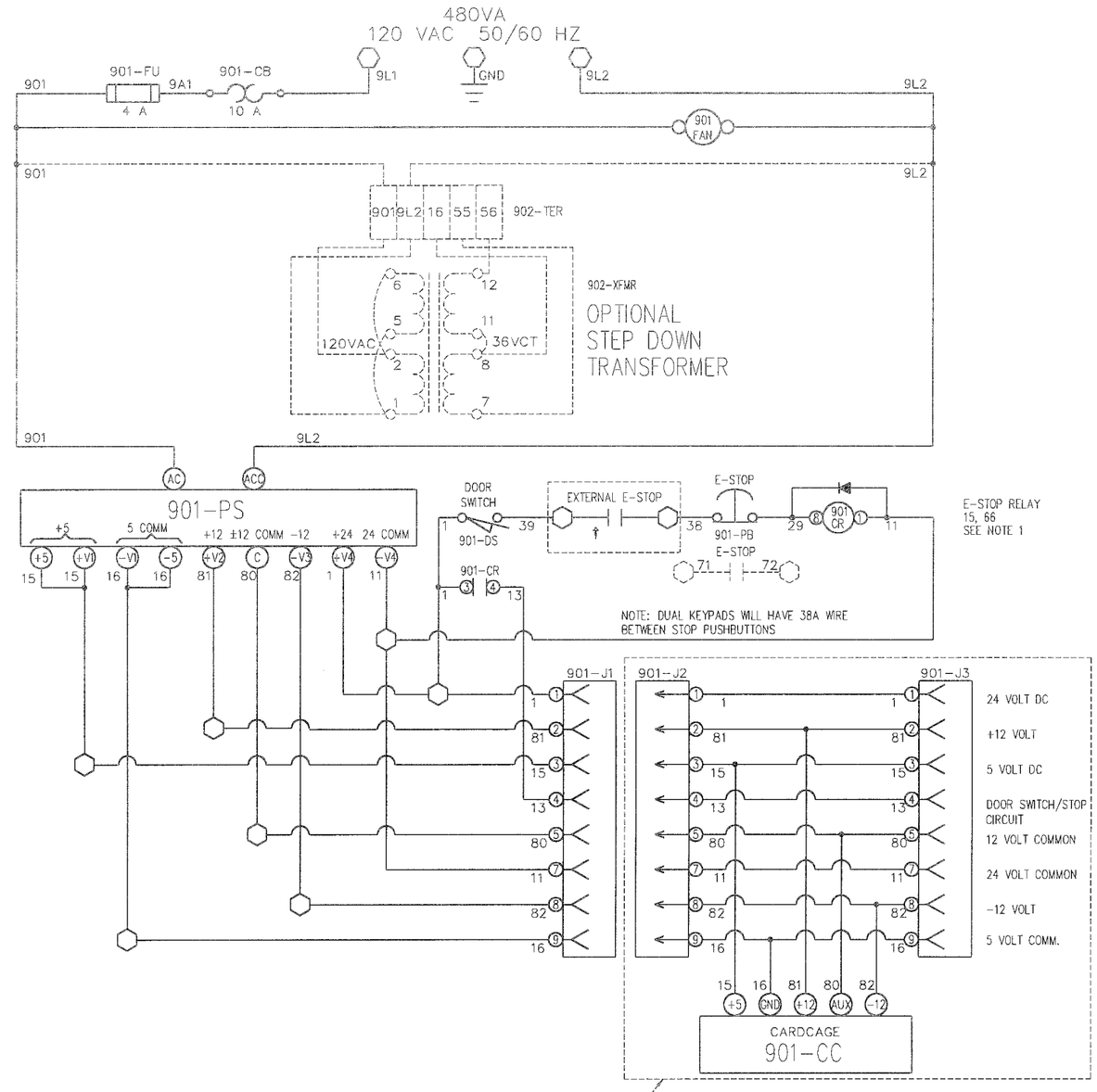

SIMPLIFIED POWER & INTERLOCKS CONNECTION DIAGRAM

POWER TO THE OPTIONAL CONTROL MODULES FLOWS IN SERIES FROM 901-J3.

NOTE: SOME PANELS WILL HAVE FEWER MODULES THAN SHOWN.
CONSULT MODULE MANUAL FOR COMPLETE MODULE SCHEMATICS.

NOTES (UNLESS OTHERWISE SPECIFIED)
1. PARTS TO CONFORM TO RIMROCK CORP. ENGR. & MFG. STANDARDS
2. ALL THREADS CLASS 2A OR 2B
3. SURFACE FINISH 125
4. DEBURR

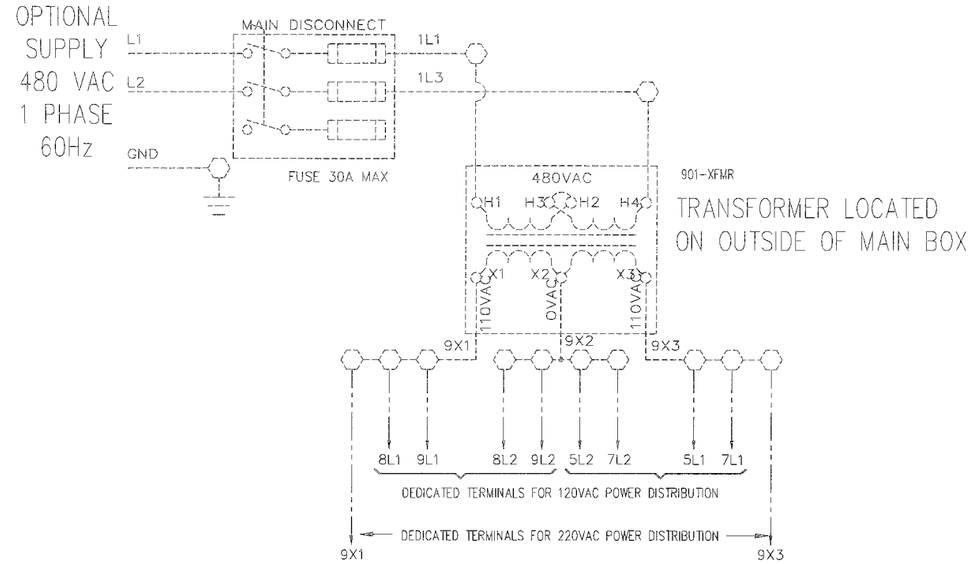

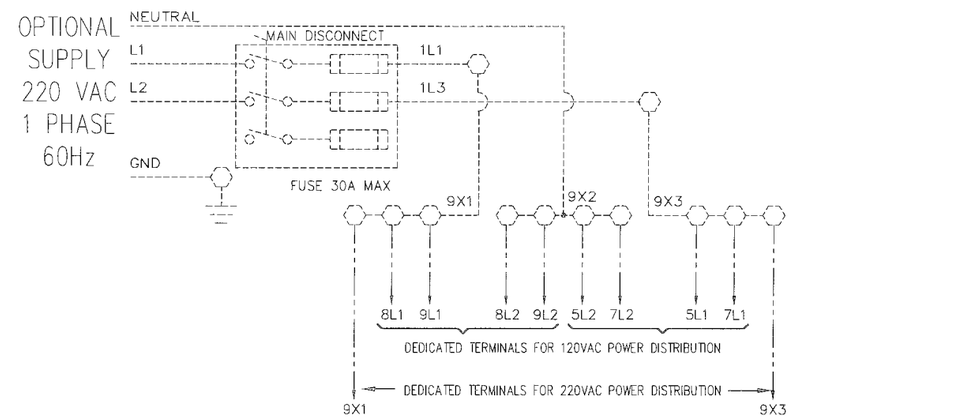

901-CR
5 6 CELL E-STOP CHAIN IF USED

NOTE 1
FIELD UPDATE UNITS WILL HAVE MORE CONNECTORS THAN SHOWN.

† CUSTOMER TO JUMPER IF NOT USING EXTERNAL E-STOP PUSH BUTTON.

REVISIONS						REVISIONS					
ER	DATE	REMARKS	LET	DR	CK	ER	DATE	REMARKS	LET	DR	CK

MAT'L: SEE B.O.M.

RIMROCK CORPORATION
1700 RIMROCK ROAD
COLUMBUS, OHIO 43219
PHONE:614-471-5926 FAX:614-471-1073
® A Registered Trademark of Rimrock Corporation, Columbus, Ohio U.S.A.

TOLERANCES UNLESS OTHERWISE SPECIFIED
2-DIGIT DECIMALS= ±.010 FRACTIONS= ±1/64
3-DIGIT DECIMALS= ±.005 ANGLES= ±1/2
4-DIGIT DECIMALS= ±.0005

DR	DATE	SCALE	PIC
DWS	2.5.99	NONE	
CK	DATE	ER	SHEET
		0116	1 OF 3

DRAWING NO. 140D11850-111 REV

DRAWING NAME MAIN PANEL - SCHEMATIC

FOR TRIANGLE SYSTEM

THIS DRAWING IS THE PROPERTY OF RIMROCK CORP. AND IS FOR THE CONFIDENTIAL USE OF THE BUYER OR SUPPLIER OF THIS EQUIPMENT

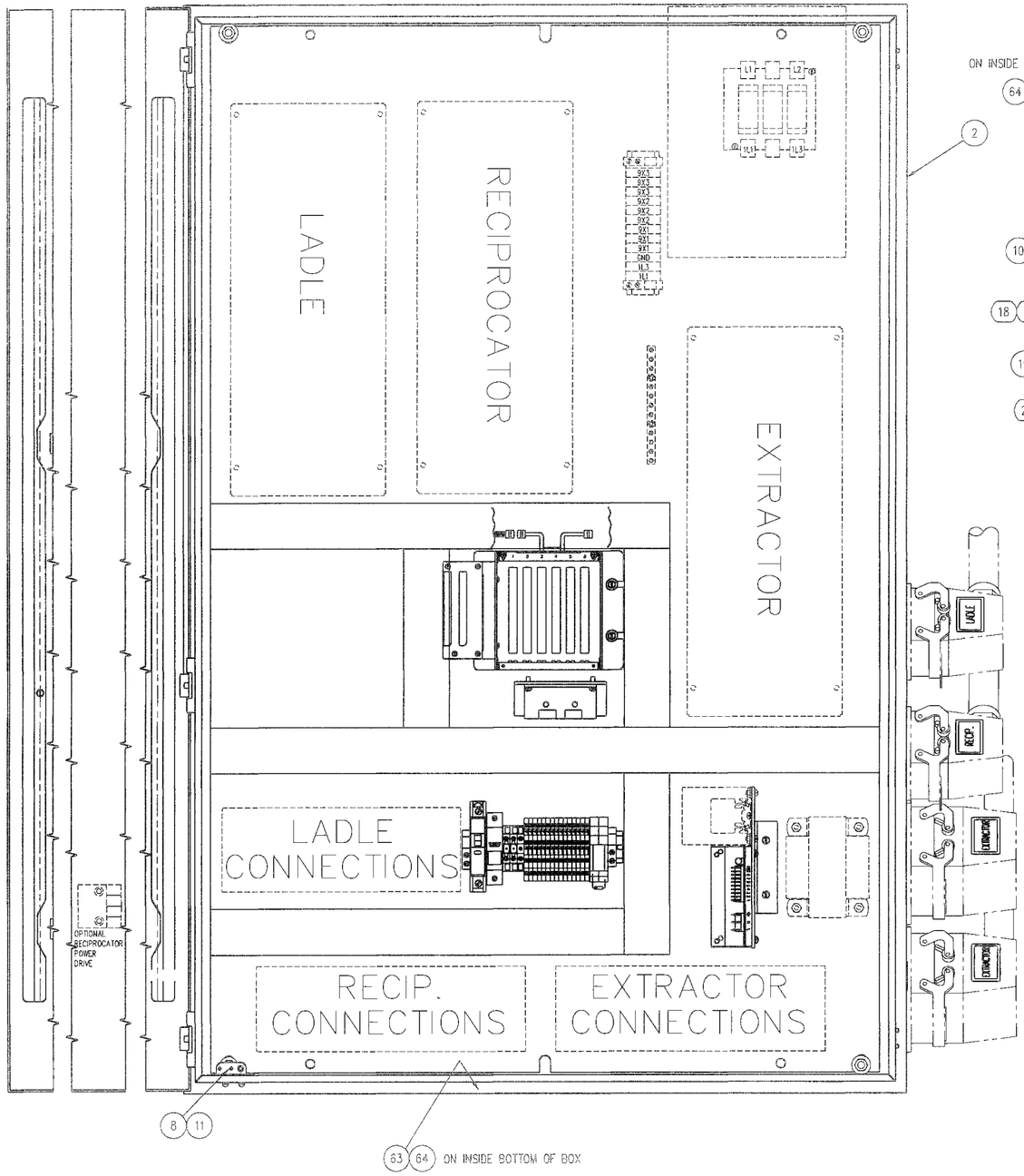

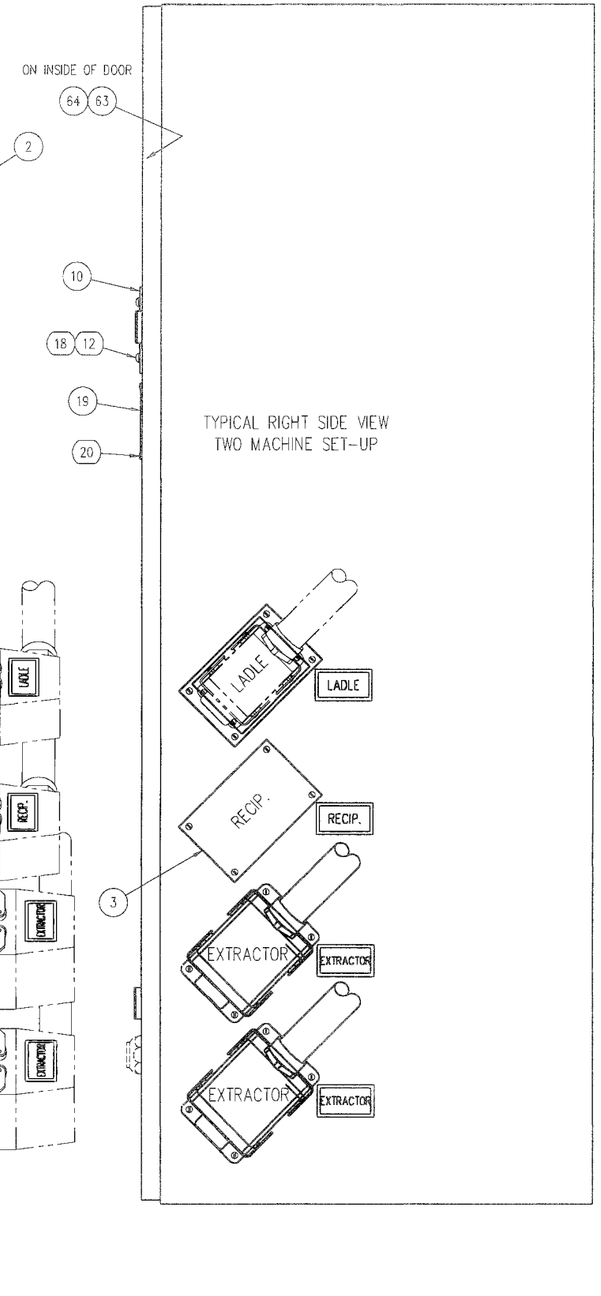

TYPICAL RIGHT SIDE VIEW
TWO MACHINE SET-UP

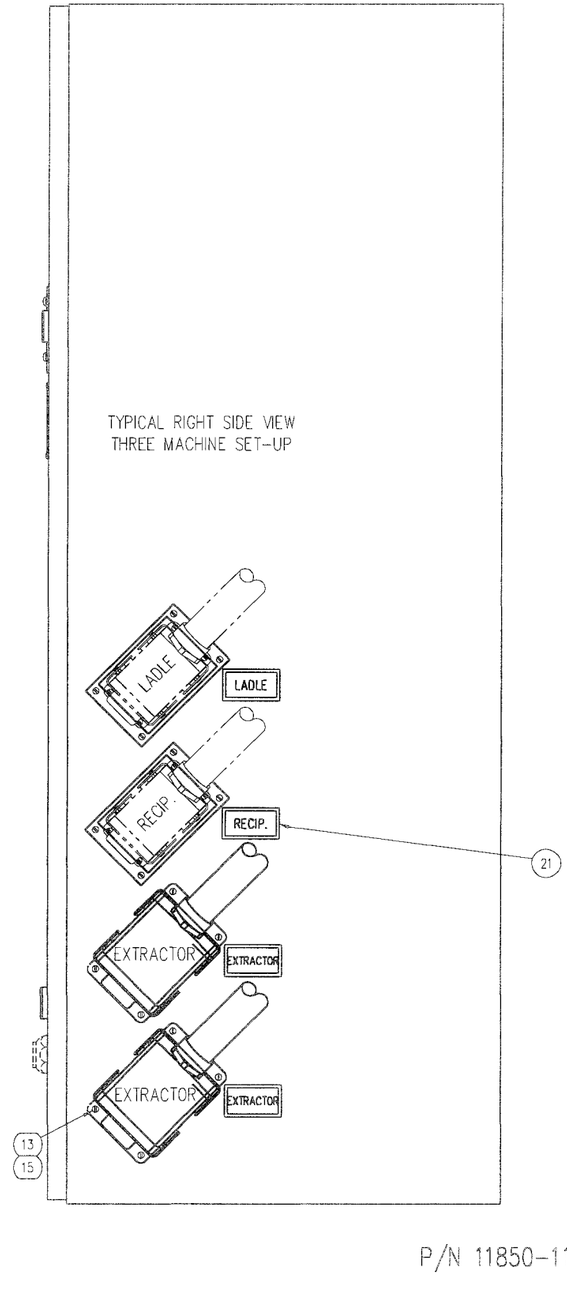

TYPICAL RIGHT SIDE VIEW
THREE MACHINE SET-UP

P/N 11850-111

NOTES (UNLESS OTHERWISE SPECIFIED)
1. PARTS TO CONFORM TO RIMROCK CORP. ENGR. & MFG. STANDARDS
2. ALL THREADS CLASS 2A OR 2B
3. SURFACE FINISH 125
4. DEBURR

REVISIONS						REVISIONS					
ER	DATE	REMARKS	LET	DR	CK	ER	DATE	REMARKS	LET	DR	CK

MAT'L: SEE B.O.M.

RIMROCK CORPORATION
1700 RIMROCK ROAD
COLUMBUS, OHIO 43219
PHONE: 614-471-5926 FAX: 614-471-1073
* A Registered Trademark of Rimrock Corporation, Columbus, Ohio U.S.A.

TOLERANCES UNLESS OTHERWISE SPECIFIED
2-DIGIT DECIMALS= ±.010 FRACTIONS= ± 1/64
3-DIGIT DECIMALS= ±.005 ANGLES= ± 1/2
4-DIGIT DECIMALS= ±.0005

DR DWS	DATE 2.4.99	SCALE 1/3	PIC
CK	DATE	DR 0116	SHEET 2 OF 3

DRAWING NO. 140D11850-111 REV

DRAWING NAME MAIN BOX ASSEMBLY

FOR TRIANGLE SYSTEM

THIS DRAWING IS THE PROPERTY OF RIMROCK CORP. AND IS FOR THE CONFIDENTIAL USE OF THE BUYER OR SUPPLIERS OF THIS EQUIPMENT

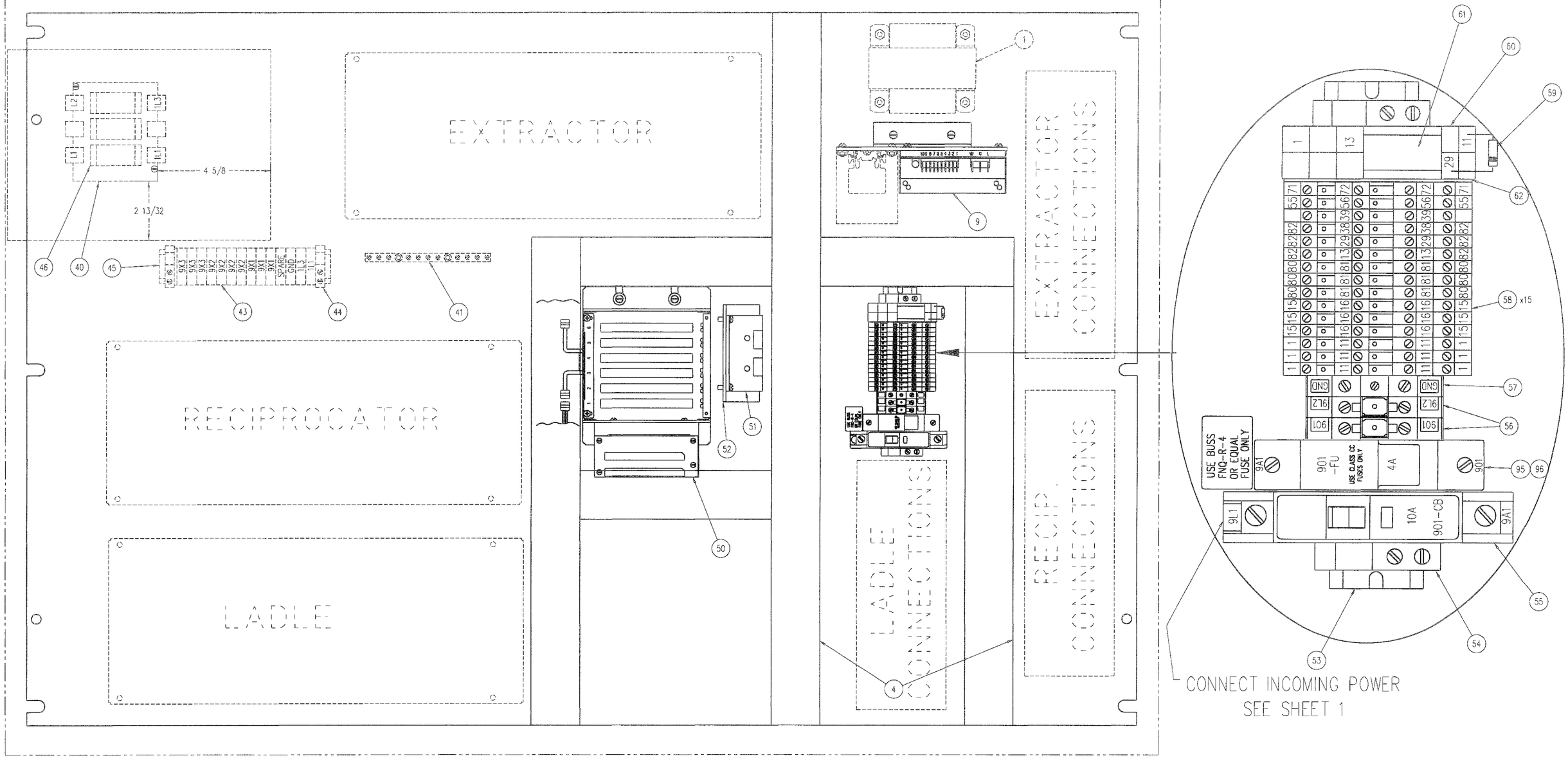

*NOTE: 40 SERIES BALLOON NUMBERS REPRESENT HIGH VOLTAGE OPTION

4. DEBURR
3. SURFACE FINISH 125
2. ALL THREADS CLASS 2A OR 2B
1. PARTS TO CONFORM TO RIMROCK CORP. ENGR. & MFG. STANDARDS

NOTES (UNLESS OTHERWISE SPECIFIED)

BY	DATE	REMARKS	LET	DR	CK
REVISIONS					

MAT'L:

RIMROCK

RIMROCK CORPORATION
1700 RIMROCK ROAD
COLUMBUS, OHIO 43219

PHONE: 614-471-5928 FAX: 614-471-1073

A Registered Trademark of Rimrock Corporation, Columbus, Ohio U.S.A.

TOLERANCES UNLESS OTHERWISE SPECIFIED
2-DIGIT DECIMALS= ±.010 FRACTIONS= ±1/64
3-DIGIT DECIMALS= ±.005 ANGLES= ±1/2
4-DIGIT DECIMALS= ±.0005

DR	DW3	DATE	2.4.99	SCALE	1/2	PIC
CK		DATE		DR	0116	SHEET 3 OF 3

DRAWING NO. 140D11850-111 REV

DRAWING NAME PANEL LAYOUT

FOR TRIANGLE SYSTEM

THIS DRAWING IS THE PROPERTY OF RIMROCK CORP. AND IS FOR THE CONFIDENTIAL USE OF THE BUYER OR SUPPLIER OF THIS EQUIPMENT

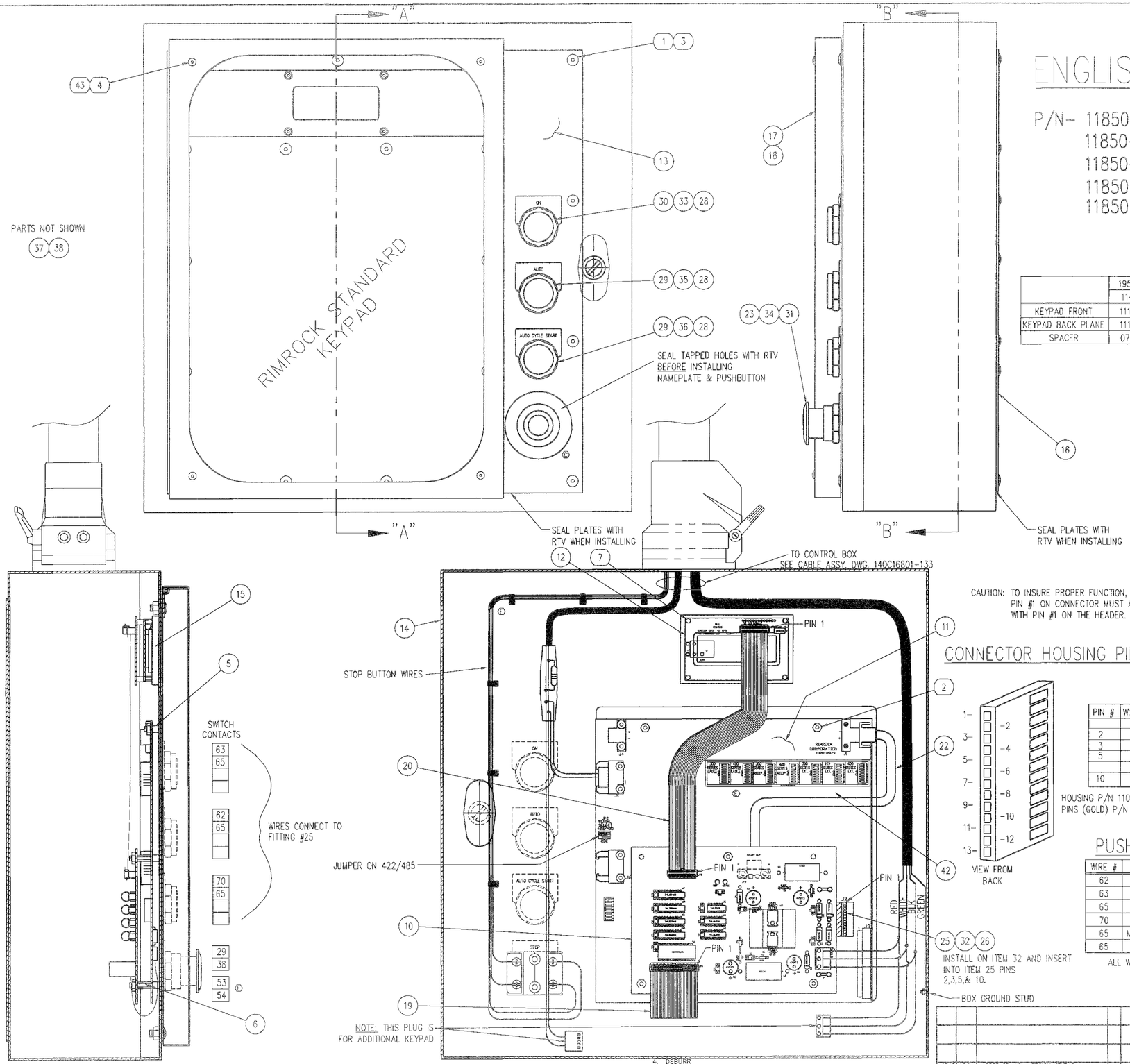

SECTION VIEW A-A

SECTION VIEW B-B

NOTES (UNLESS OTHERWISE SPECIFIED)
4. DEBURR
3. SURFACE FINISH 125
2. ALL THREADS CLASS 2A OR 2B
1. PARTS TO CONFORM TO RIMROCK CORP. ENGR. & MFG. STANDARDS

ENGLISH KEYPAD

P/N- 11850-50 (LADLES)
11850-53 (RECIPROCATORS)
11850-55 (300 SERIES) EXT.
11850-56 (195 SERIES)
11850-59 (400 SERIES) EXT.

KEYPAD ASSEMBLIES

	195 SERIES	LADLES	RECIP'S	300 SERIES	400 SERIES
	11450-63	11450-60	11450-61	11450-62	11450-170
KEYPAD FRONT	11120-104	11120-100	11120-102	11120-105	11120-10
KEYPAD BACK PLANE	11120-109	11120-109	11120-109	11120-109	11120-109
SPACER	07621-111	07621-111	07621-111	07621-111	07621-111

Ⓔ SPANISH KEYPAD

P/N- 11850-50E (LADLES)
11850-53E (RECIPROCATORS)
11850-56E (195 SERIES)

Ⓔ KEYPAD ASSEMBLIES

	195 SERIES	LADLES	RECIP'S
	11450-63E	11450-60E	11450-61E
KEYPAD FRONT	11120-114	11120-107	11120-113
KEYPAD BACK PLANE	11120-109	11120-109	11120-109
SPACER	07621-111	07621-111	07621-111

CAUTION: TO INSURE PROPER FUNCTION, PIN #1 ON CONNECTOR MUST ALIGN WITH PIN #1 ON THE HEADER.

CONNECTOR HOUSING PIN-OUT

VIEW FROM BACK

PIN #	WIRE #
2	62
3	63
5	65
10	70

HOUSING P/N 11042-013
PINS (GOLD) P/N 11042-103

PUSH BUTTON WIRE ROUTING

WIRE #	FROM	TERM P/N	TO	TERM P/N
62	PIN 2	11042-103	AUTO P.B.	11215-03
63	PIN 3	11042-103	MANUAL P.B.	11215-03
65	PIN 5	11042-103	MANUAL P.B.	11215-03
70	PIN 10	11042-103	CYCLE START	11215-03
65	MANUAL P.B.	11215-03	AUTO P.B.	11215-03
65	AUTO P.B.	11215-03	CYCLE START P.B.	11215-03

ALL WIRES TO BE BLUE #20 AWG. (P/N 02898-49)

INSTALL ON ITEM 32 AND INSERT INTO ITEM 25 PINS 2,3,5,& 10.

KEYPAD DIP SWITCH SETTINGS

300 SERIES LADLE			
400 SERIES LADLE		195 SERIES EXT.	
300 SERIES RECIP.		300 SERIES EXT.	
400 SERIES RECIP.		400 SERIES EXT.	

NOTE: THESE ARE THE ONLY POSSIBLE SETTINGS FOR THE KEYPAD. ANY OTHER SETTING WILL RESULT IN AN ERROR CONDITION.

NOTE: THESE ARE THE ONLY POSSIBLE SETTINGS FOR THE KEYPAD. ANY OTHER SETTING WILL RESULT IN AN ERROR CONDITION. Ⓔ

ER	DATE	REMARKS	LET	DR	CK
0743	10.1 99	ADDED SPANISH VERSION KEYPAD.	F	JPS	
0033	3.04 99	CHANGED OPTIONAL STOP CONTACTS TO #53 AND #54	E	JPS	
0033	3.04 99	REMOVED BALLON #5 44 THRU 50. UPDATED KEYPAD DIP SWITCH SETTINGS	E	JPS	
1024	12.4 98	CHANGED POWER CABLE TO ADD GROUND LEAD	D	DS	
844	11.09 98	REPLACED E-STOP PLATE WITH E-STOP LEGEND PLATE.	C	KRS	
802	10.06 98	MOVED PUSH BUTTON LOCATION TO REFLECT CHANGE IN MOUNT PANEL	B	KRS	
727	9.15 98	ADDED "REF. DWG" NOTE	A	SMB	

REVISIONS

MAT'L: SEE B.O.M.

RIMROCK CORPORATION
1700 RIMROCK ROAD
COLUMBUS, OHIO 43219
PHONE: 614-471-5926 FAX: 614-471-1073
® A Registered Trademark of Rimrock Corporation, Columbus, Ohio U.S.A.

TOLERANCES UNLESS OTHERWISE SPECIFIED
2-DIGIT DECIMALS= ±.010 FRACTIONS= ±1/64
3-DIGIT DECIMALS= ±.005 ANGLES= ±1/2
4-DIGIT DECIMALS= ±.0005

DR SMB DATE 4.20.98 SCALE 1/2 PIC
CK DATE ER 028 SHEET 1 OF 2
DRAWING NO. 140D11850-50 REV F
DRAWING NAME KEYPAD ASSEMBLY
FOR TRIANGLE SYSTEMS

THIS DRAWING IS THE PROPERTY OF RIMROCK CORP. AND IS FOR THE CONFIDENTIAL USE OF THE BUYER OR SUPPLIER OF THIS EQUIPMENT

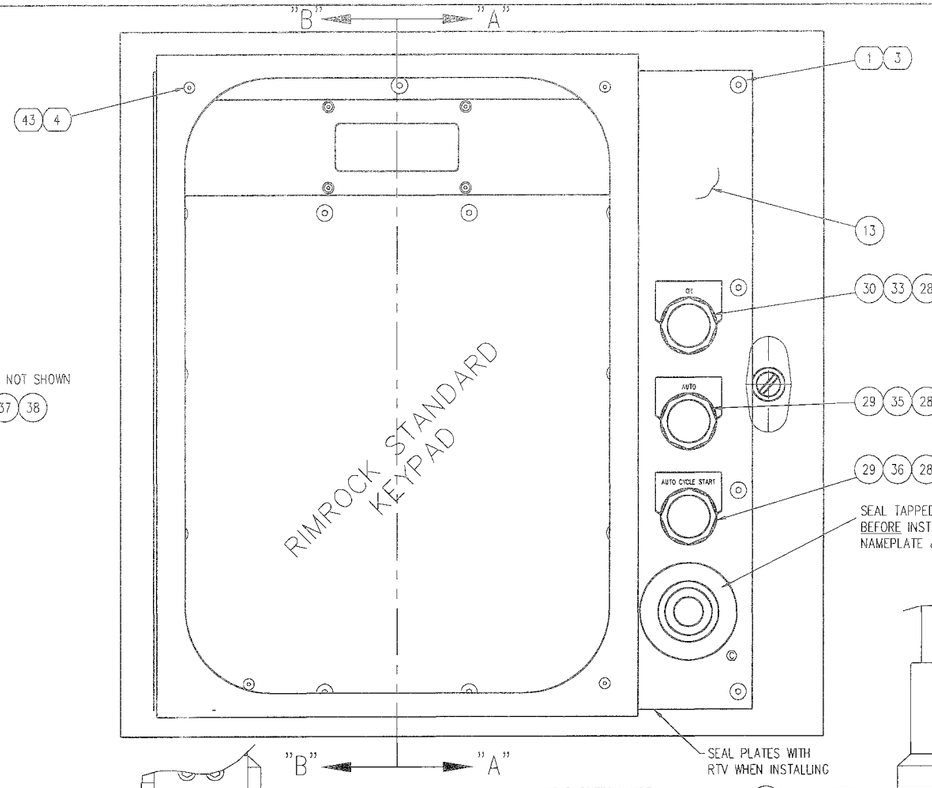

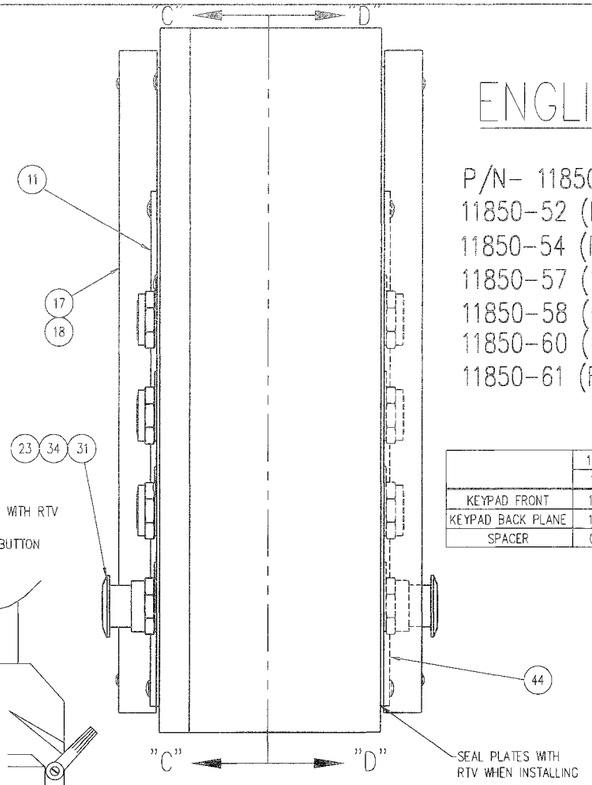

ENGLISH KEYPAD

P/N- 11850-51 (LADLES & RECIP'S)
11850-52 (LADLES & 300 SERIES EXT.)
11850-54 (RECIP'S & 300 SERIES EXT.)
11850-57 (195 SERIES EXT. & LADLES)
11850-58 (RECIP'S & 195 SERIES EXT.)
11850-60 (400 SERIES EXT. & LADLES)
11850-61 (RECIP'S & 400 SERIES EXT.)

KEYPAD ASSEMBLIES

	195 SERIES	LADLES	RECIP'S	300 SERIES	400 SERIES
	11450-63	11450-60	11450-61	11450-62	11450-170
KEYPAD FRONT	11120-104	11120-100	11120-102	11120-105	11120-10
KEYPAD BACK PLANE	11120-109	11120-109	11120-109	11120-109	11120-109
SPACER	07621-111	07621-111	07621-111	07621-111	07621-111

© SPANISH KEYPAD

P/N- 11850-51E (LADLES & RECIP'S)
11850-57E (195 SERIES EXT. & LADLES)
11850-58E (RECIP'S & 195 SERIES EXT.)

© KEYPAD ASSEMBLIES

	195 SERIES	LADLES	RECIP'S
	11450-63E	11450-60E	11450-61E
KEYPAD FRONT	11120-114	11120-107	11120-113
KEYPAD BACK PLANE	11120-109	11120-109	11120-109
SPACER	07621-111	07621-111	07621-111

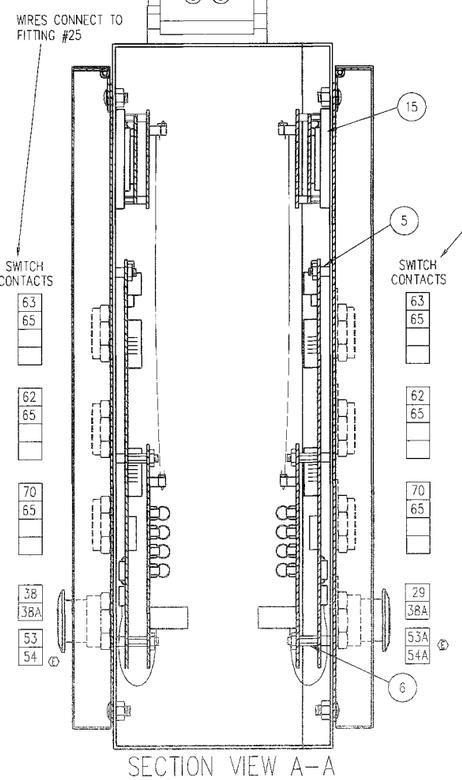

SECTION VIEW A-A
(SECTION VIEW B-B IS SAME, MIRRORED)

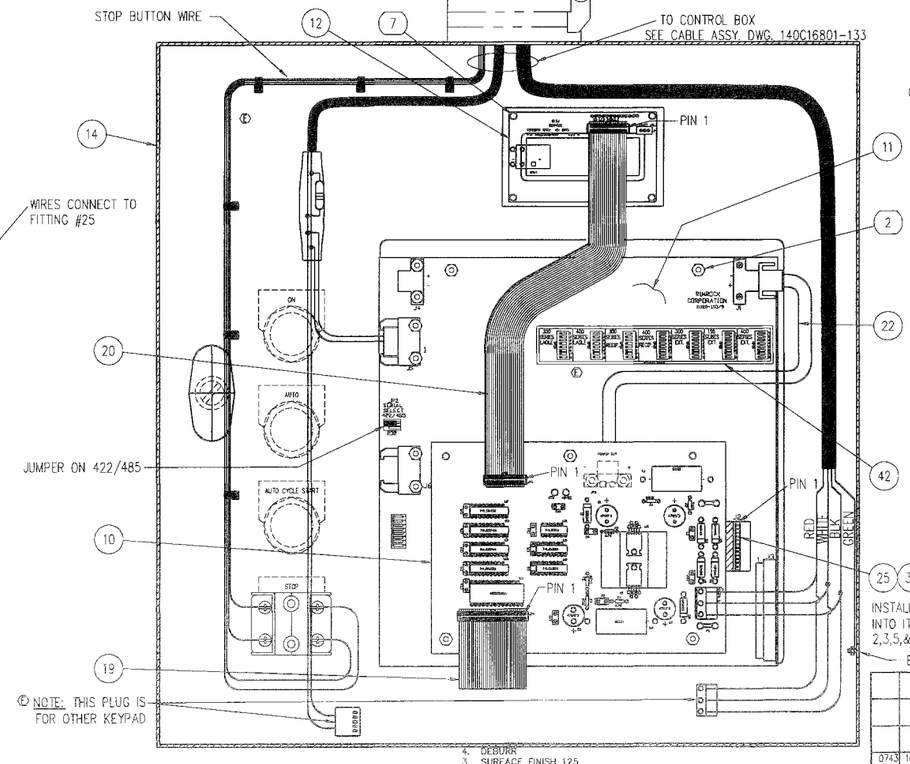

SECT. VIEW C-C & D-D

CAUTION: TO INSURE PROPER FUNCTION, PIN #1 ON CONNECTOR MUST ALIGN WITH PIN #1 ON THE HEADER.

CONNECTOR HOUSING PIN-OUT

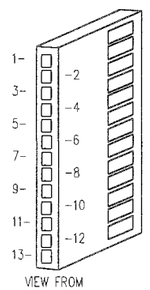

VIEW FROM BACK

PIN #	WIRE #
2	62
3	63
5	65
10	70

HOUSING P/N 11042-013
PINS (GOLD) P/N 11042-103

PUSH BUTTON WIRE ROUTING

WIRE #	FROM	TERM P/N	TO	TERM P/N
62	PIN 2	11042-103	AUTO P.B.	11215-03
63	PIN 3	11042-103	MANUAL P.B.	11215-03
65	PIN 5	11042-103	MANUAL P.B.	11215-03
70	PIN 10	11042-103	CYCLE START	11215-03
65	MANUAL P.B.	11215-03	AUTO P.B.	11215-03
65	AUTO P.B.	11215-03	CYCLE START P.B.	11215-03

ALL WIRES TO BE BLUE #20 AWG. (P/N 02898-49)

KEYPAD DIP SWITCH SETTINGS

300 SERIES LADLE			
400 SERIES LADLE		195 SERIES EXT.	
300 SERIES RECIP.		300 SERIES EXT.	
400 SERIES RECIP.		400 SERIES EXT.	

NOTE : THESE ARE THE ONLY POSSIBLE SETTINGS FOR THE KEYPAD. ANY OTHER SETTING WILL RESULT IN AN ERROR CONDITION.

NOTE : THESE ARE THE ONLY POSSIBLE SETTINGS FOR THE KEYPAD. ANY OTHER SETTING WILL RESULT IN AN ERROR CONDITION. ©

NOTES (UNLESS OTHERWISE SPECIFIED)
1. PARTS TO CONFORM TO RIMROCK CORP. ENGR. & MFG. STANDARDS
2. ALL THREADS CLASS 2A OR 2B
3. SURFACE FINISH 125
4. DEBURR

REVISIONS

ER	DATE	REMARKS	LET	DR	CK
0743	10.1 99	ADDED SPANISH VERSION KEYPAD.	F	JPS	
0033	3.04 99	CHANGED OPTIONAL STOP CONTACTS TO #53 AND #54	E	JPS	
0033	3.04 98	REMOVED BALLOON #S 44 THRU 50. UPDATED KEYPAD DIP SWITCH SETTINGS	E	JPS
1024	12.4 98	CHANGED POWER CABLE TO ADD GROUND WIRE	D	DS
844	11.09 98	REPLACED E-STOP PLATE WITH E-STOP LEGEND PLATE.	C	KRS
602	10.05 98	MOVED PUSH BUTTON LOCATION TO REFLECT CHANGE IN MOUNT PANEL	B	KRS
727	9.15 98	ADDED "REF. DWG." NOTE	A	SMB

MAT'L: SEE B.O.M.

TOLERANCES UNLESS OTHERWISE SPECIFIED
2-DIGIT DECIMALS= ±.010 FRACTIONS= ±1/64
3-DIGIT DECIMALS= ±.005 ANGLES= ±1/2
4-DIGIT DECIMALS= ±.0005

RIMROCK CORPORATION
1700 RIMROCK ROAD
COLUMBUS, OHIO 43219
PHONE: 614-471-5926 FAX: 614-471-1073
* A Registered Trademark of Rimrock Corporation, Columbus, Ohio U.S.A.

DR SMB DATE 4.20.98 SCALE 1/2 PIC
CK DATE ER 028 SHEET 2 OF 2
DRAWING NO. 140D11850-50 REV F
DRAWING NAME KEYPAD ASSEMBLY
FOR TRIANGLE SYSTEMS

THIS DRAWING IS THE PROPERTY OF RIMROCK CORP. AND IS FOR THE CONFIDENTIAL USE OF THE BUYER OR SUPPLIER OF THIS EQUIPMENT

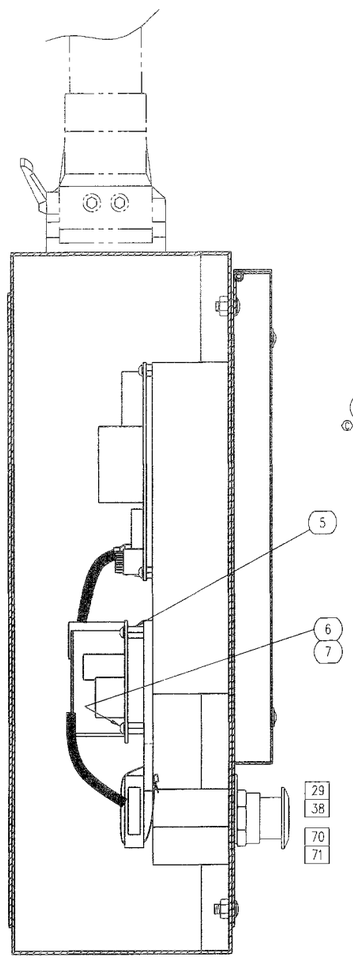

SECTION VIEW A-A

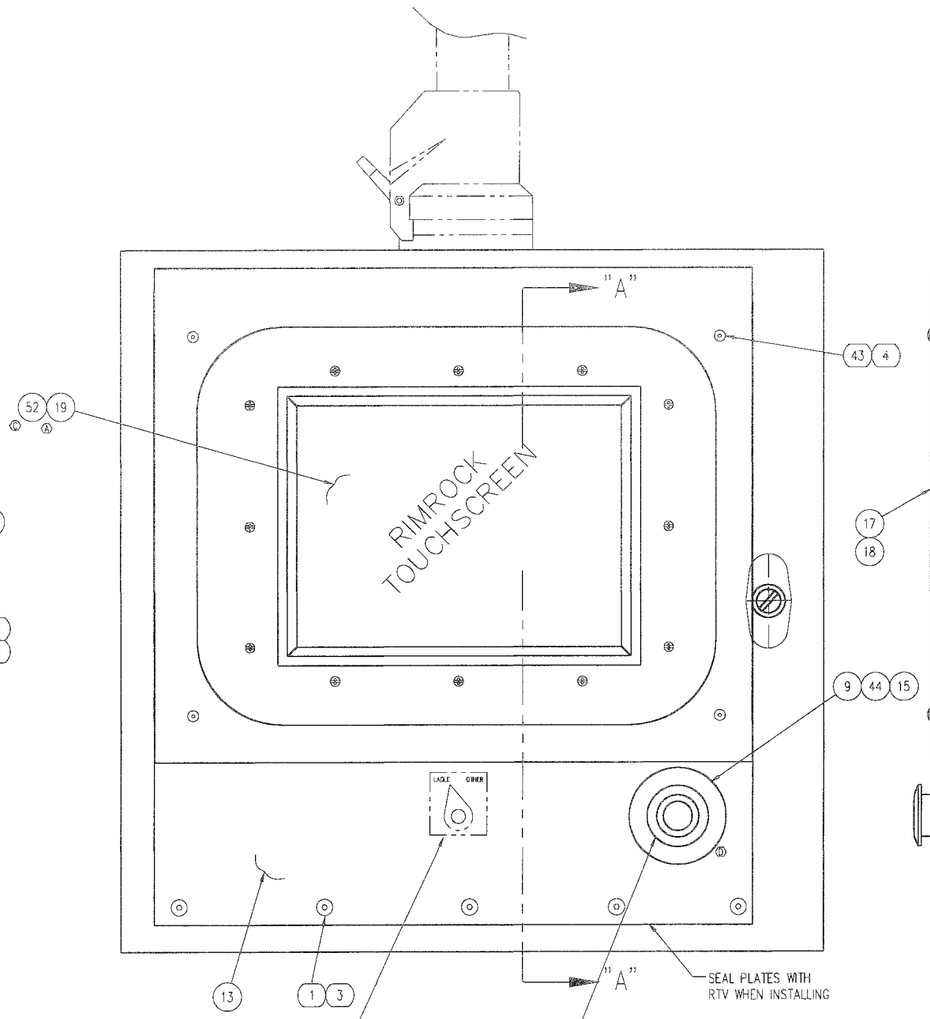

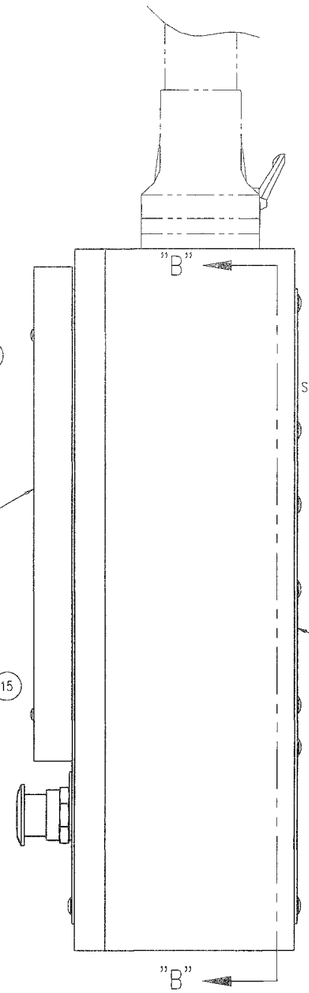

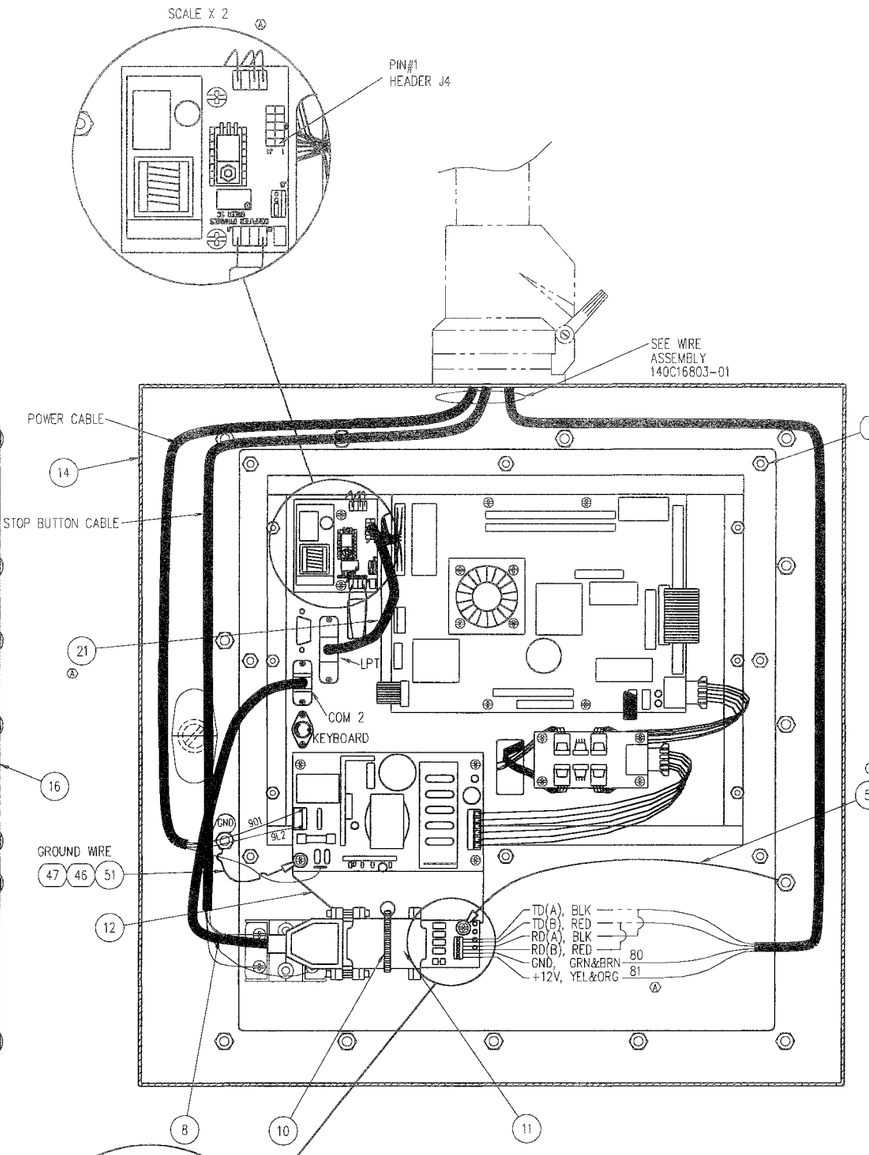

SECTION VIEW B-B

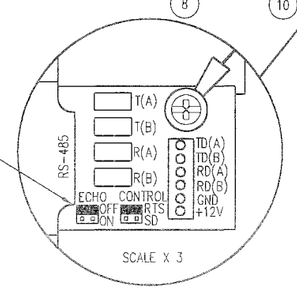

NOTE: RS-485 TO RS-232 CONVERTER Ⓑ
JUMPER CONFIGURATION
ECHO - OFF
CONTROL - RTS

P/N - 11850-65 (STANDARD ASSEMBLY)
11850-66 (405 COMBINATION ASSEMBLY) Ⓐ

NOTES (UNLESS OTHERWISE SPECIFIED)
1. PARTS TO CONFORM TO RIMROCK CORP. ENGR. & MFG. STANDARDS
2. ALL THREADS CLASS 2A OR 2B
3. SURFACE FINISH 125
4. DEBURR

ER	DATE	REMARKS	LET	DR	CK
844	11.09.98	REPLACED E-STOP PLATE WITH E-STOP LEGEND PLATE.	D	KRS	
711	9.11.98	UPDATED B.O.M., & ADDED BALLOON #52	C	SME	
503	06.19.98	ADDED 485 TO 232 CONVERTER JUMPER CONFIG. NOTE	B	DLC	
505	06.10.98	ADDED BAL# 19, 20 & 21, ADDED ASSY 11850-65, CORRECTED SIG. WIRE	A	DLC	

REVISIONS

MAT'L: SEE B.O.M.

DR SME DATE 4.20.98 SCALE 1/2 WT

CK DATE ER 026 SHEET OF

DRAWING NO. 140D11850-65 REV D

DRAWING NAME TOUCH SCREEN ASSEMBLY

FOR TRIANGLE SYSTEMS

RIMROCK CORPORATION
1700 RIMROCK ROAD
COLUMBUS, OHIO 43219
PHONE: 614-471-5926 FAX: 614-471-1073

® A Registered Trademark of Rimrock Corporation, Columbus, Ohio U.S.A.

TOLERANCES UNLESS OTHERWISE SPECIFIED
2-DIGIT DECIMALS= ±.010 FRACTIONS= ±1/64
3-DIGIT DECIMALS= ±.005 ANGLES= ±1/2
4-DIGIT DECIMALS= ±.0005

THIS DRAWING IS THE PROPERTY OF RIMROCK CORP. AND IS FOR THE CONFIDENTIAL USE OF THE BUYER OR SUPPLIER OF THIS EQUIPMENT

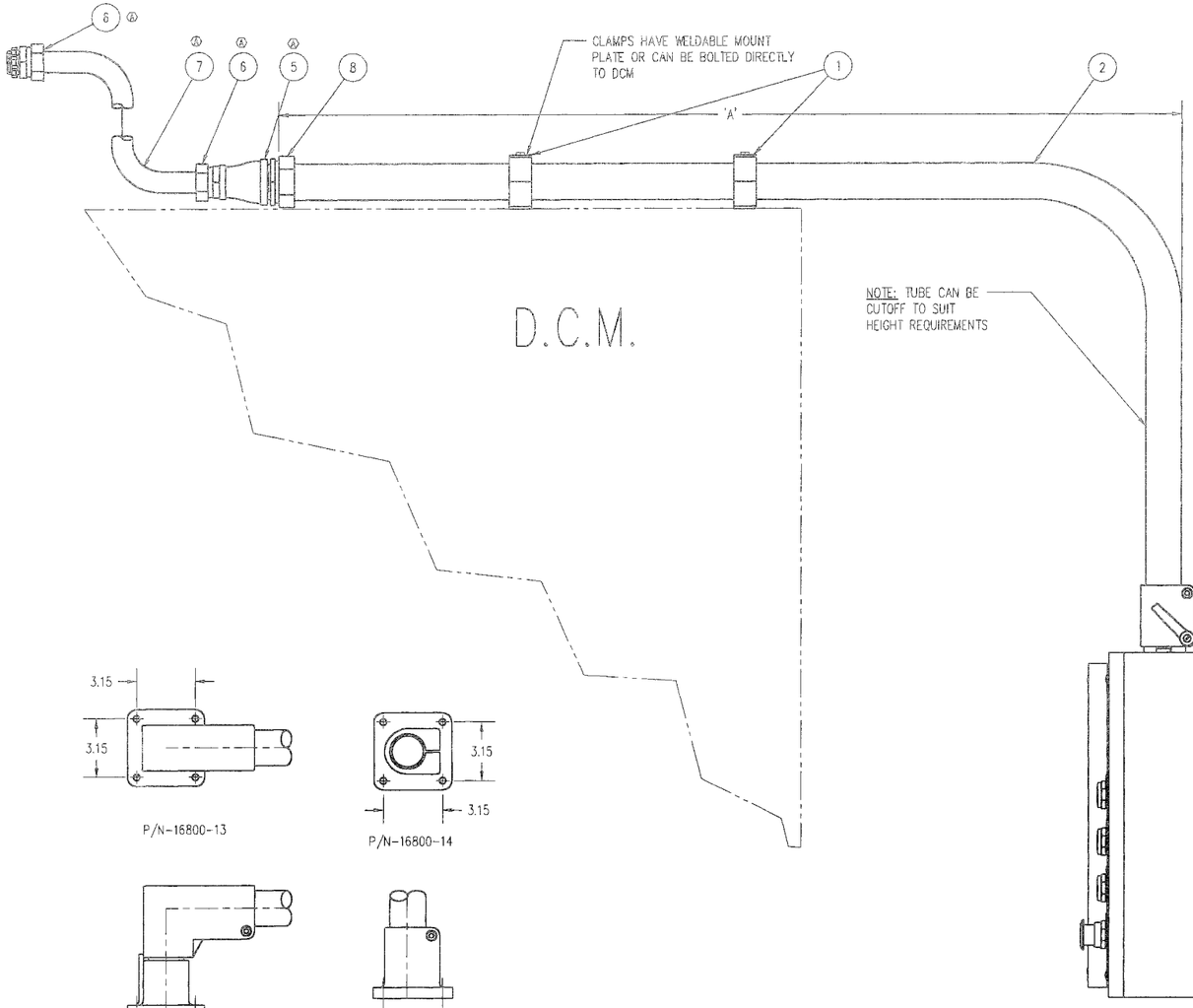

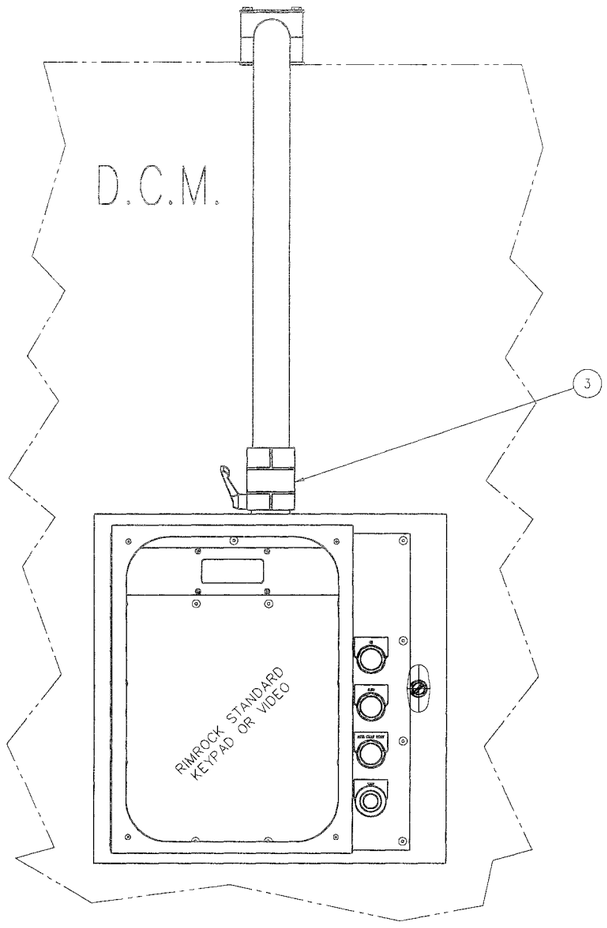

P/N-16800-13

P/N-16800-14

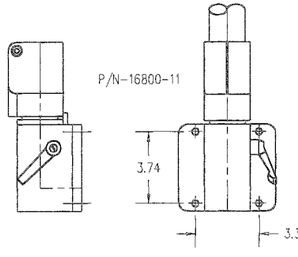

P/N-16800-11

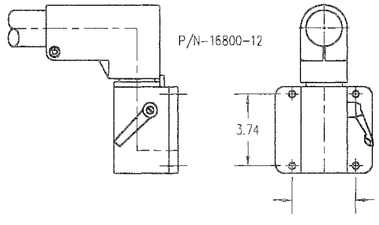

P/N-16800-12

OPTIONAL MACHINE MOUNTS

(ORDERED SEPERATELY)

72"	16800-03	11450-104
48"	16800-01	11450-101
"A"	PART NUMBER	ASSY NUMBER

P/N-11450-101

4. DEBURR
3. SURFACE FINISH 125
2. ALL THREADS CLASS 2A OR 2B
1. PARTS TO CONFORM TO RIMROCK CORP. ENGR. & MFG. STANDARDS

NOTES (UNLESS OTHERWISE SPECIFIED)

ER	DATE	REMARKS	LET	DR	CK
505	6-12-98	UPDATED TO NEW OPERATOR ENCLOSURE	B	MAK	
001	1.2.95	UPDATED CONDUIT SIZE TO 1"	A	AR	

REVISIONS

MAT'L: SEE B.O.M.

TOLERANCES UNLESS OTHERWISE SPECIFIED
2-DIGIT DECIMALS= ± .010 FRACTIONS= ± 1/64
3-DIGIT DECIMALS= ± .005 ANGLES= ± 1/2
4-DIGIT DECIMALS= ± .0005

RIMROCK CORPORATION
1700 RIMROCK ROAD
BOX U (MAIL)(43081) 43219
COLUMBUS, OHIO 43219
PHONE: 614-471-5626 TELEX: 245-401 FAX: 614-471-0083
® A Registered Trademark of Rimrock Corporation, Columbus, Ohio U.S.A.

DR CKD	DATE 12.01.94
CK	DATE
SCALE	1/4
DR	194
SHEET	OF
DRAWING NO.	140D11450-101
REV	B
DRAWING NAME	REMOTE OPERATER MOUNT ASSY
FOR	TRIANGLE SYSTEM

THIS DRAWING IS THE PROPERTY OF RIMROCK CORP. AND IS FOR THE CONFIDENTIAL USE OF THE BUYER OR SUPPLIER OF THIS EQUIPMENT.

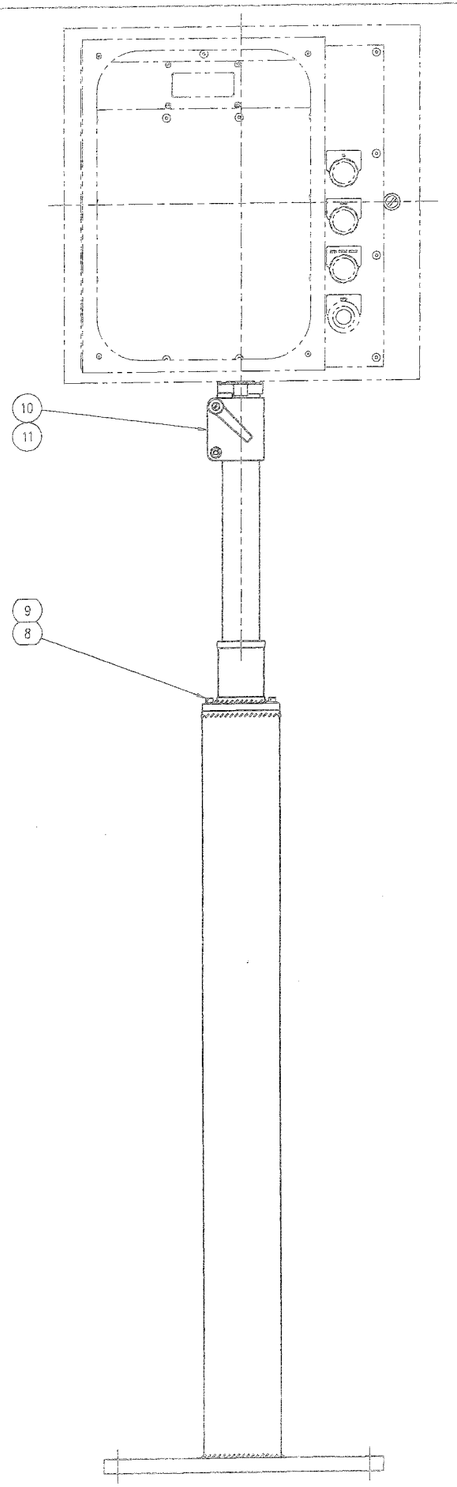

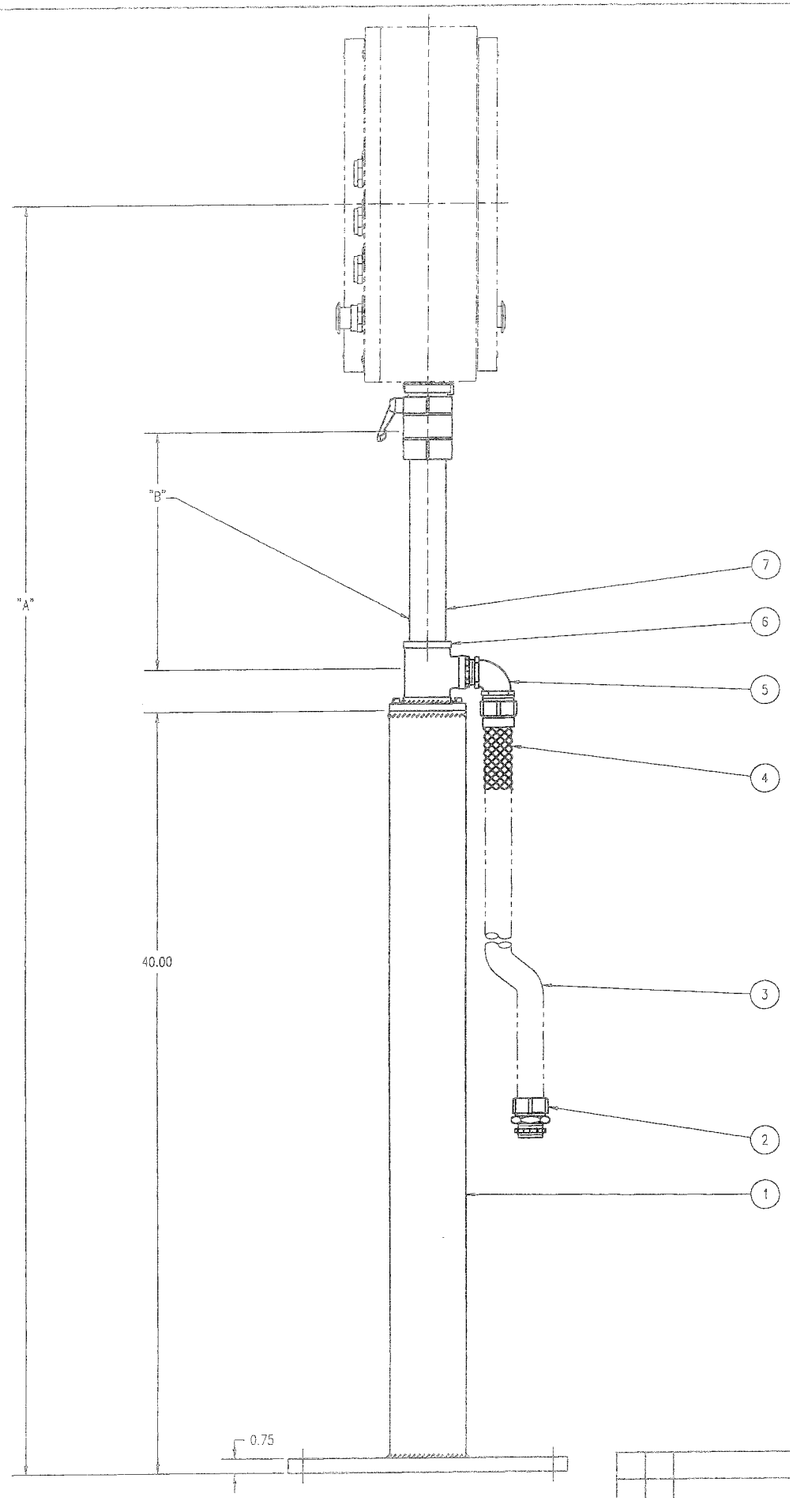

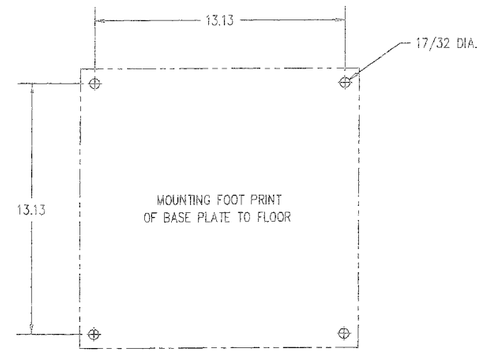

REFERENCE TABLE			
ASSEMBLY P/N	DIMENSION "A"	DIMENSION "B"	ITEM #7
11850-68	66.5 INCHES	12.5 INCHES	09529-09
11850-69	78.5 INCHES	24.5 INCHES	09529-20

ITEM	DESCRIPTION	QTY	PART NUMBER
11	BOLT- SHCS M6- 1.00 X 12MM	4	09013-12
10	SWIVEL COUPLING 250'	1	16800-02
9	SHCS 1/4-20 X 3/4"	4	02559
8	LOCKWASHER 1/4"	4	02695-4
7	TOP EXTENSION PIPE	1	SEE TABLE
6	TUBE SUPPORT WELDMENT	1	11450-219
5	CONDUIT CONNECTOR 90'	1	02082-4
4	1" CONDUIT KELLEM	1	08395-4
3	CONDUIT 1" EXTRAFLEX	REF.	02083-3
2	CONDUIT CONNECTOR 1" STRAIGHT	1	02103-4
1	BASE SUPPORT WELDMENT	1	11450-218

4. DEBURR
3. SURFACE FINISH 125
2. ALL THREADS CLASS 2A OR 2B
1. PARTS TO CONFORM TO RIMROCK CORP. ENGR. & MFG. STANDARDS

NOTES (UNLESS OTHERWISE SPECIFIED)

ER	DATE	REMARKS	LET	DR	CK
REVISIONS					

MAT'L: SEE BOM

RIMROCK CORPORATION
1700 RIMROCK ROAD
COLUMBUS, OHIO 43219
PHONE: 614-471-5628 FAX: 614-471-1073
® A Registered Trademark of Rimrock Corporation, Columbus, Ohio U.S.A.

TOLERANCES UNLESS OTHERWISE SPECIFIED
2-DIGIT DECIMALS= ±.010 FRACTIONS= ±1/64
3-DIGIT DECIMALS= ±.005 ANGLES= ±1/2
4-DIGIT DECIMALS= ±.0005

DR	ACY	DATE	08.10.98	SCALE	1/4	PIC
CK		DATE		ER	650	SHEET 1 OF 1

DRAWING NO. 140D11850-68 REV

DRAWING NAME: FLOOR MOUNT STAND ASSEMBLY

FOR TRIANGLE KEYPAD OR VIDEO ASSEMBLY

THIS DRAWING IS THE PROPERTY OF RIMROCK CORP. AND IS FOR THE CONFIDENTIAL USE OF THE BUYER OR SUPPLIER OF THIS EQUIPMENT.

NOTE: WIRE NUMBERS FOR SINGLE STOP BUTTON SHOWN, FOR MULTIPLE STOP BUTTONS SEE CHART.
ALSO SEE DRAWING 140D16810-200 FOR THREE KEYPAD CABLE ASSEMBLY.

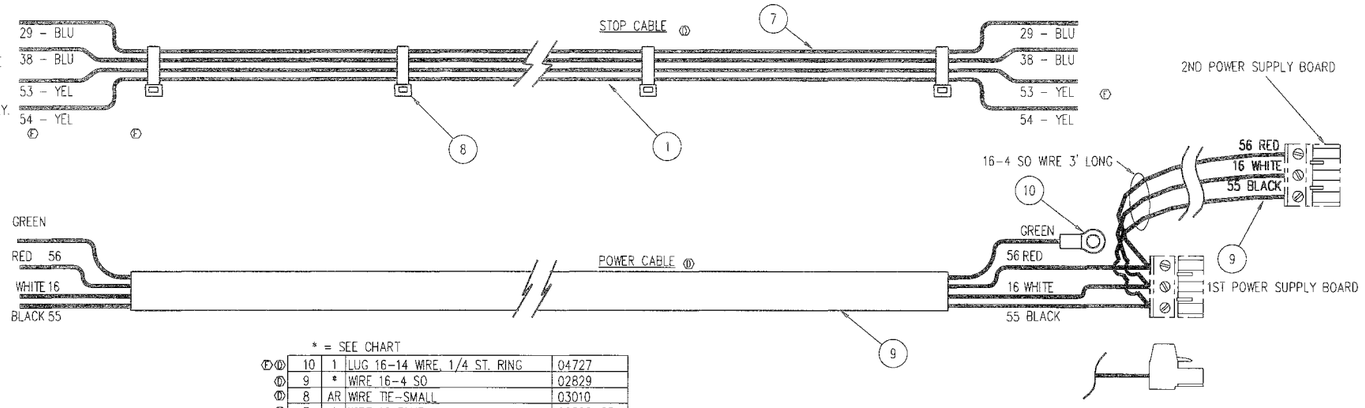

REF: DRAWING 140D11850-01,02

* = SEE CHART

⑦⑪	10	1	LUG 16-14 WIRE, 1/4 ST. RING		04727
⑪	9	*	WIRE 16-4 SO		02829
⑪	8	AR	WIRE TIE-SMALL		03010
⑪	7	*	WIRE 16 BLUE		02898-65
	6	7	H.P. RECEPTACLE CONTACT		11042-103
	5	3	10-PIN CONNECTOR		11042-10
	4	12.5"	HEAT SHRINK 3/8 BLK		09810-2
	3	2	RESISTOR 100 OHM .25W		08295-52
	2	*	20-2 SHIELDED CABLE		02915-22
⑪	1	*	WIRE 14 YELLOW		02898-4
⑦	BAL. #	QTY	DESCRIPTION		PART NO.

NOTE: NOTCH



REAR VIEW

PIN	COLOR	FUNCTION
7	BLACK	TRANSMIT/RECEIVE -
9	RED	TRANSMIT/RECEIVE +
10	SHIELD	

FUNCTION	COLOR	PIN
TRANSMIT / RECEIVE -	BLACK	1
TRANSMIT / RECEIVE +	RED	3

NOTE: NOTCH



REAR VIEW

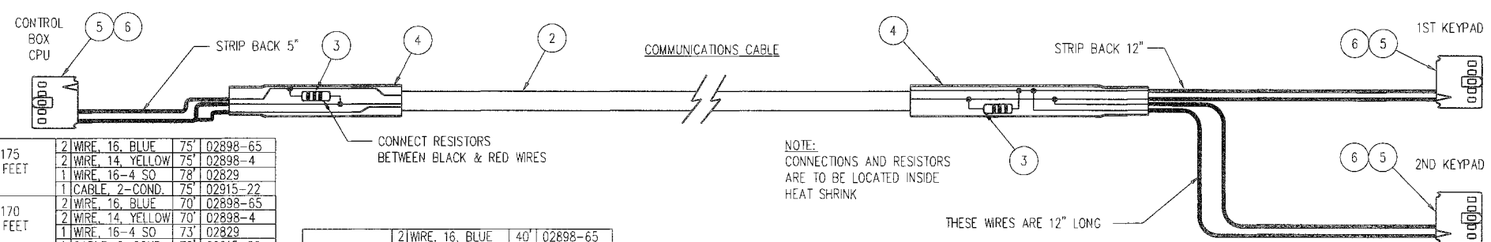

NOTE:
CONNECTIONS AND RESISTORS ARE TO BE LOCATED INSIDE HEAT SHRINK

-175 75 FEET	2	WIRE, 16, BLUE	75'	02898-65
	2	WIRE, 14, YELLOW	75'	02898-4
	1	WIRE, 16-4 SO	78'	02829
	1	CABLE, 2-COND.	75'	02915-22
-170 70 FEET	2	WIRE, 16, BLUE	70'	02898-65
	2	WIRE, 14, YELLOW	70'	02898-4
	1	WIRE, 16-4 SO	73'	02829
	1	CABLE, 2-COND.	70'	02915-22
-165 65 FEET	2	WIRE, 16, BLUE	65'	02898-65
	2	WIRE, 14, YELLOW	65'	02898-4
	1	WIRE, 16-4 SO	68'	02829
	1	CABLE, 2-COND.	65'	02915-22
-160 60 FEET	2	WIRE, 16, BLUE	60'	02898-65
	2	WIRE, 14, YELLOW	60'	02898-4
	1	WIRE, 16-4 SO	63'	02829
	1	CABLE, 2-COND.	60'	02915-22
-155 55 FEET	2	WIRE, 16, BLUE	55'	02898-65
	2	WIRE, 14, YELLOW	55'	02898-4
	1	WIRE, 16-4 SO	58'	02829
	1	CABLE, 2-COND.	55'	02915-22
-150 50 FEET	2	WIRE, 16, BLUE	50'	02898-65
	2	WIRE, 14, YELLOW	50'	02898-4
	1	WIRE, 16-4 SO	53'	02829
	1	CABLE, 2-COND.	50'	02915-22
-145 45 FEET	2	WIRE, 16, BLUE	45'	02898-65
	2	WIRE, 14, YELLOW	45'	02898-4
	1	WIRE, 16-4 SO	48'	02829
	1	CABLE, 2-COND.	45'	02915-22
DASH NO & LENGTH	QTY	DESCRIPTION	CUT	PART NO.

-140 40 FEET	2	WIRE, 16, BLUE	40'	02898-65
	2	WIRE, 14, YELLOW	40'	02898-4
	1	WIRE, 16-4 SO	43'	02829
	1	CABLE, 2-COND.	40'	02915-22
-135 35 FEET	2	WIRE, 16, BLUE	35'	02898-65
	2	WIRE, 14, YELLOW	35'	02898-4
	1	WIRE, 16-4 SO	38'	02829
	1	CABLE, 2-COND.	35'	02915-22
-133 33 FEET	2	WIRE, 16, BLUE	33'	02898-65
	2	WIRE, 14, YELLOW	33'	02898-4
	1	WIRE, 16-4 SO	36'	02829
	1	CABLE, 2-COND.	33'	02915-22
-125 25 FEET	2	WIRE, 16, BLUE	25'	02898-65
	2	WIRE, 14, YELLOW	25'	02898-4
	1	WIRE, 16-4 SO	28'	02829
	1	CABLE, 2-COND.	25'	02915-22
DASH NO & LENGTH	QTY	DESCRIPTION	CUT	PART NO.

-110 10 FEET	2	WIRE, 16, BLUE	12'	02898-65
	2	WIRE, 14, YELLOW	12'	02898-4
	1	WIRE, 16-4 SO	15'	02829
	1	CABLE, 2-COND.	12'	02915-22
-105 05 FEET	2	WIRE, 16, BLUE	07'	02898-65
	2	WIRE, 14, YELLOW	07'	02898-4
	1	WIRE, 16-4 SO	10'	02829
	1	CABLE, 2-COND.	07'	02915-22
DASH NO & LENGTH	QTY	DESCRIPTION	CUT	PART NO.

NOTES (UNLESS OTHERWISE SPECIFIED)
1. PARTS TO CONFORM TO RIMROCK CORP. ENGR. & MFG. STANDARDS
2. ALL THREADS CLASS 2A OR 2B
3. SURFACE FINISH 125
4. DEBURR

ER	DATE	REMARKS	LET	DR	CK
374	6.2 99	CHANGED REFERENCE NOTE AND E-STOP #'S. CHANGED P/N FOR BAL #10	F	DWS	
550	6-25 98	ADDED 5 FOOT CABLE LENGTH	A	MK	
545	7.1 98	CHANGED BLUE WIRE TO SO-3	B	JJM	
991	11.19 98	ADDED: -110, & BOM.	C	JBF	
1024	12.4 98	CHANGED CABLE REQUIREMENTS FROM SO-3 TO SINGLE WIRE ON E-STOP	D	DS	
0135	2-16 99	ADDED 25' CABLE	R	MF	

REVISIONS

MAT'L: SEE B.O.M.

RIMROCK CORPORATION
1700 RIMROCK ROAD
COLUMBUS, OHIO 43318
PHONE: 614-471-5228 FAX: 614-471-1073
® A Registered Trademark of Rimrock Corporation, Columbus, Ohio U.S.A.

TOLERANCES UNLESS OTHERWISE SPECIFIED
2-DIGIT DECIMALS= ±.010 FRACTIONS= ± 1/64
3-DIGIT DECIMALS= ±.005 ANGLES= ±1/2
4-DIGIT DECIMALS= ±.0005

DR	SMB	DATE	4.27.98	SCALE	FULL
CK		DATE		ER	028

SHEET OF

DRAWING NO. 140C16801-133 REV F

DRAWING NAME: REMOTE KEYPAD CABLE ASSEMBLY FOR RS-485

FOR: TRIANGLE SYSTEM (NEW ENCLOSURE)

THIS DRAWING IS THE PROPERTY OF RIMROCK CORP. AND IS FOR THE CONFIDENTIAL USE OF THE BUYER OR SUPPLIER OF THIS EQUIPMENT

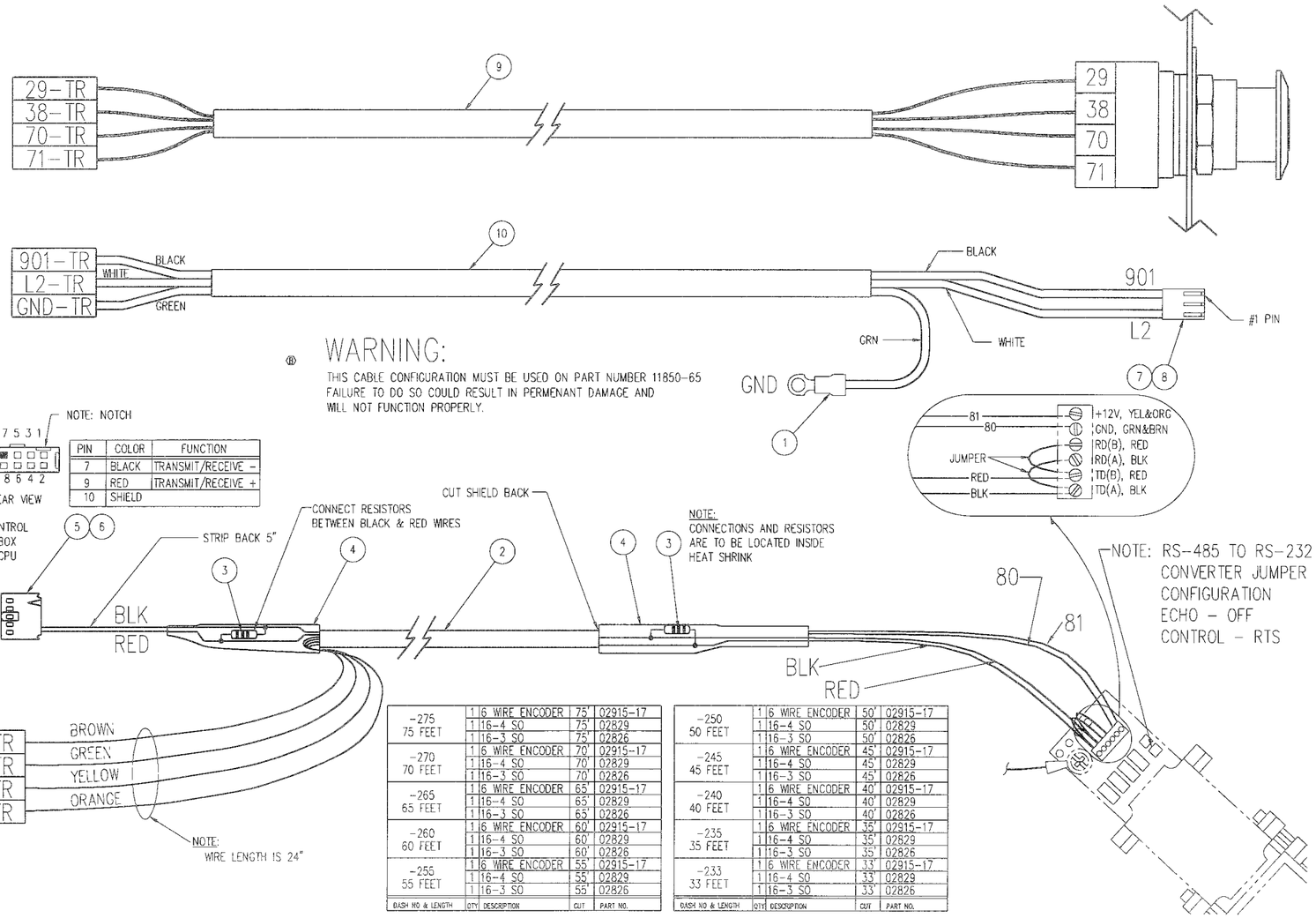

PIN	COLOR	FUNCTION
7	BLACK	TRANSMIT/RECEIVE -
9	RED	TRANSMIT/RECEIVE +
10	SHIELD	

WARNING:

THIS CABLE CONFIGURATION MUST BE USED ON PART NUMBER 11850-65
FAILURE TO DO SO COULD RESULT IN PERMENANT DAMAGE AND
WILL NOT FUNCTION PROPERLY.

DASH NO & LENGTH	QTY	DESCRIPTION	CUT	PART NO.
-275 75 FEET	1	6 WIRE ENCODER	75'	02915-17
	1	16-4 SO	75'	02829
	1	16-3 SO	75'	02826
-270 70 FEET	1	6 WIRE ENCODER	70'	02915-17
	1	16-4 SO	70'	02829
	1	16-3 SO	70'	02826
-265 65 FEET	1	6 WIRE ENCODER	65'	02915-17
	1	16-4 SO	65'	02829
	1	16-3 SO	65'	02826
-260 60 FEET	1	6 WIRE ENCODER	60'	02915-17
	1	16-4 SO	60'	02829
	1	16-3 SO	60'	02826
-255 55 FEET	1	6 WIRE ENCODER	55'	02915-17
	1	16-4 SO	55'	02829
	1	16-3 SO	55'	02826

DASH NO & LENGTH	QTY	DESCRIPTION	CUT	PART NO.
-250 50 FEET	1	6 WIRE ENCODER	50'	02915-17
	1	16-4 SO	50'	02829
	1	16-3 SO	50'	02826
-245 45 FEET	1	6 WIRE ENCODER	45'	02915-17
	1	16-4 SO	45'	02829
	1	16-3 SO	45'	02826
-240 40 FEET	1	6 WIRE ENCODER	40'	02915-17
	1	16-4 SO	40'	02829
	1	16-3 SO	40'	02826
-235 35 FEET	1	6 WIRE ENCODER	35'	02915-17
	1	16-4 SO	35'	02829
	1	16-3 SO	35'	02826
-233 33 FEET	1	6 WIRE ENCODER	33'	02915-17
	1	16-4 SO	33'	02829
	1	16-3 SO	33'	02826

NOTES (UNLESS OTHERWISE SPECIFIED)
1. PARTS TO CONFORM TO RIMROCK CORP. ENGR. & MFG. STANDARDS
2. ALL THREADS CLASS 2A OR 2B
3. SURFACE FINISH 125
4. DEBURR

ER	DATE	REMARKS	LET	DR	CK
613	7.24 98	CHANGED WARNING MESSAGE	B	MK	
505	6.22 98	CHANGED TO AS BUILT	A	MK	

REVISIONS

MAT'L: SEE B.O.M.

RIMROCK CORPORATION
1700 RIMROCK ROAD
COLUMBUS, OHIO 43219
PHONE: 614-471-5628 FAX: 614-471-1073
RIMROCK is a Registered Trademark of Rimrock Corporation, Columbus, Ohio U.S.A.

TOLERANCES UNLESS OTHERWISE SPECIFIED
2-DIGIT DECIMALS= ±.010 FRACTIONS= ±1/64
3-DIGIT DECIMALS= ±.005 ANGLES= ±1/2
4-DIGIT DECIMALS= ±.0005

DR SMB	DATE 5.8.98	SCALE FULL	PIC
CK	DATE	ER 028	SHEET OF

DRAWING NO. 140C16803-01 REV B

DRAWING NAME VIDEO TOUCH SCREEN CABLE ASSEMBLY

FOR TRIANGLE SYS. TOUCH SCREEN, NEW STYLE

THIS DRAWING IS THE PROPERTY OF RIMROCK CORP. AND IS FOR THE CONFIDENTIAL USE OF THE BUYER OR SUPPLIER OF THIS EQUIPMENT

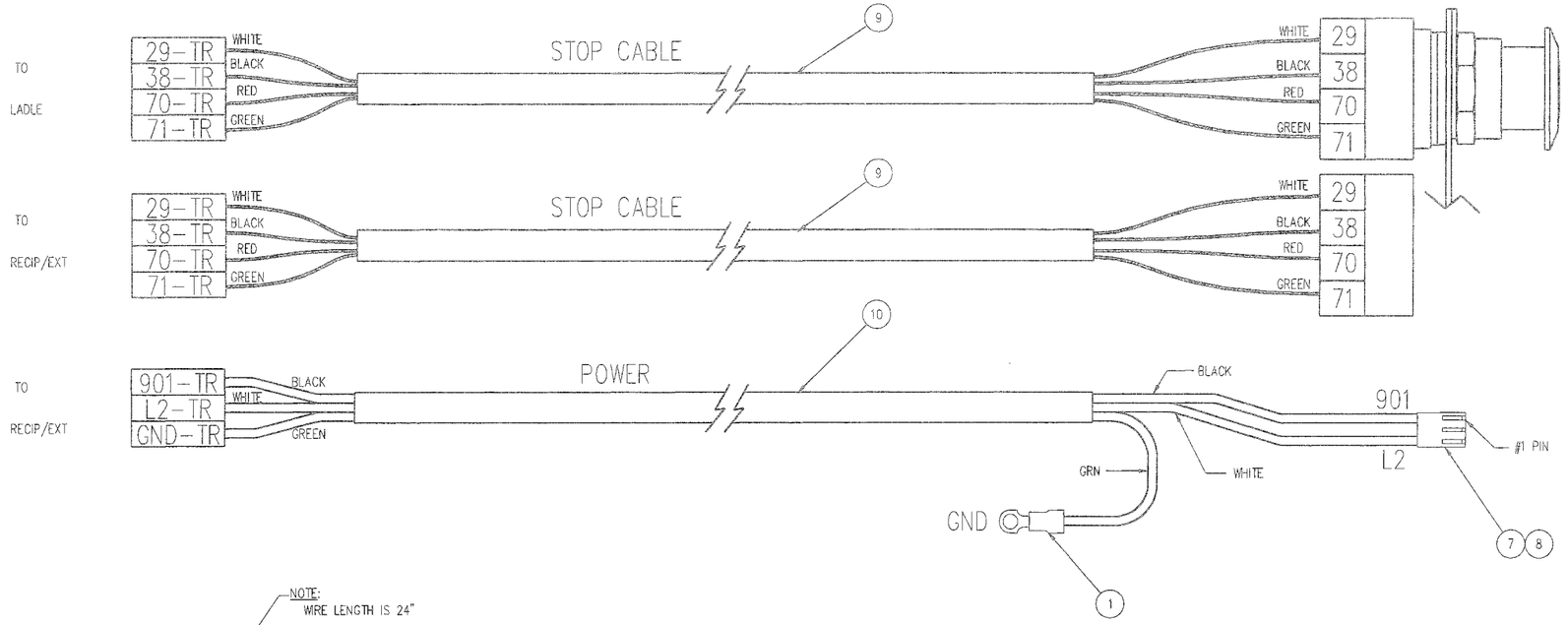

PIN	COLOR	FUNCTION
7	BLACK	TRANSMIT/RECEIVE −
9	RED	TRANSMIT/RECEIVE +
10	SHIELD	

FUNCTION	COLOR	PIN	WIRE #
SHIELD	NONE	4	–
TRANSMIT / RECEIVE +	RED	5	–
TRANSMIT / RECEIVE −	BLACK	6	–
12VDC COMMON	BRN/GRN	2	80
12VDC +	ORG/YLW	8	81

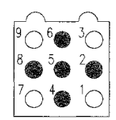

VIEW A-A

DASH NO & LENGTH	QTY	DESCRIPTION	CUT	PART NO.
-75 75 FEET	1	16 WIRE ENCODER	150'	02915-17
	1	16-4 SO	150'	02829
	1	16-3 SO	75'	02826
-70 70 FEET	1	16 WIRE ENCODER	140'	02915-17
	1	16-4 SO	140'	02829
	1	16-3 SO	70'	02826
-65 65 FEET	1	16 WIRE ENCODER	130'	02915-17
	1	16-4 SO	130'	02829
	1	16-3 SO	65'	02826
-60 60 FEET	1	16 WIRE ENCODER	120'	02915-17
	1	16-4 SO	120'	02829
	1	16-3 SO	60'	02826
-55 55 FEET	1	16 WIRE ENCODER	110'	02915-17
	1	16-4 SO	110'	02829
	1	16-3 SO	55'	02826

DASH NO & LENGTH	QTY	DESCRIPTION	CUT	PART NO.
-50 50 FEET	1	16 WIRE ENCODER	100'	02915-17
	1	16-4 SO	100'	02829
	1	16-3 SO	50'	02826
-45 45 FEET	1	16 WIRE ENCODER	90'	02915-17
	1	16-4 SO	90'	02829
	1	16-3 SO	45'	02826
-40 40 FEET	1	16 WIRE ENCODER	80'	02915-17
	1	16-4 SO	80'	02829
	1	16-3 SO	40'	02826
-35 35 FEET	1	16 WIRE ENCODER	70'	02915-17
	1	16-4 SO	70'	02829
	1	16-3 SO	35'	02826
-33 33 FEET	1	16 WIRE ENCODER	66'	02915-17
	1	16-4 SO	66'	02829
	1	16-3 SO	33'	02826

4. DEBURR
3. SURFACE FINISH 125
2. ALL THREADS CLASS 2A OR 2B
1. PARTS TO CONFORM TO RIMROCK CORP. ENGR. & MFG. STANDARDS

NOTES (UNLESS OTHERWISE SPECIFIED)

ER	DATE	REMARKS	LET	DR	CK
505	6-18-98	CHANGED TO AS BUILT	A	MAK	

REVISIONS

MATL: SEE B.O.M.

RIMROCK CORPORATION
1700 RIMROCK ROAD
COLUMBUS, OHIO 43219
PHONE: 614-471-5026 FAX: 614-471-1073

*A Registered Trademark of Rimrock Corporation, Columbus, Ohio U.S.A.

DR MAK DATE 6.12.98 SCALE FULL PIC
CK DATE ER 505 SHEET OF

DRAWING NO. 140D11851 REV A

DRAWING NAME VIDEO TOUCH SCREEN
485 COMMUNICATION CABLES
FOR A-B SELECTOR SWITCH

TOLERANCES UNLESS OTHERWISE SPECIFIED
2-DIGIT DECIMALS= ±.010 FRACTIONS= ±1/64
3-DIGIT DECIMALS= ±.005 ANGLES= ±1/2
4-DIGIT DECIMALS= ±.0005

THIS DRAWING IS THE PROPERTY OF RIMROCK CORP. AND IS FOR THE CONFIDENTIAL USE OF THE BUYER OR SUPPLIER OF THIS EQUIPMENT

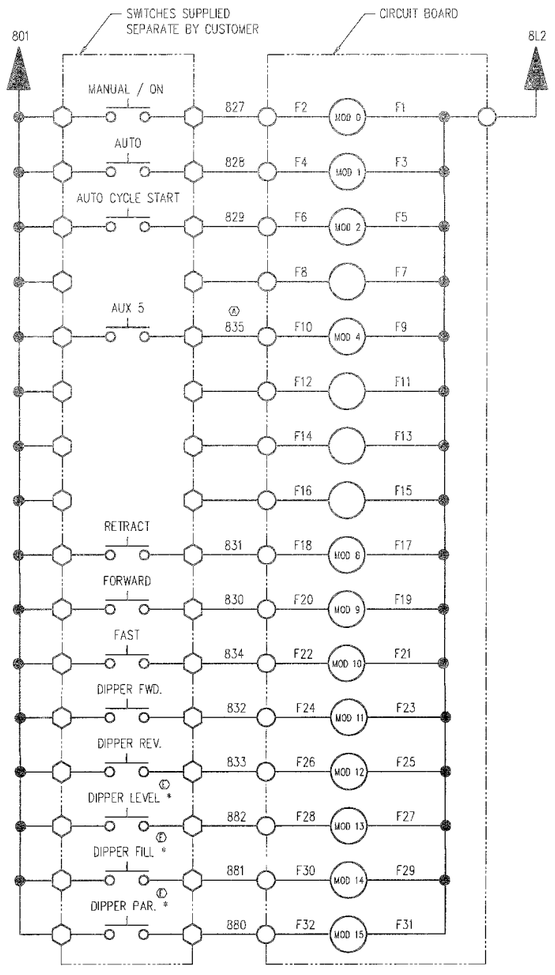

305/405 SCHEMATIC DIAGRAM

* DENOTES 405 ONLY ⓓ

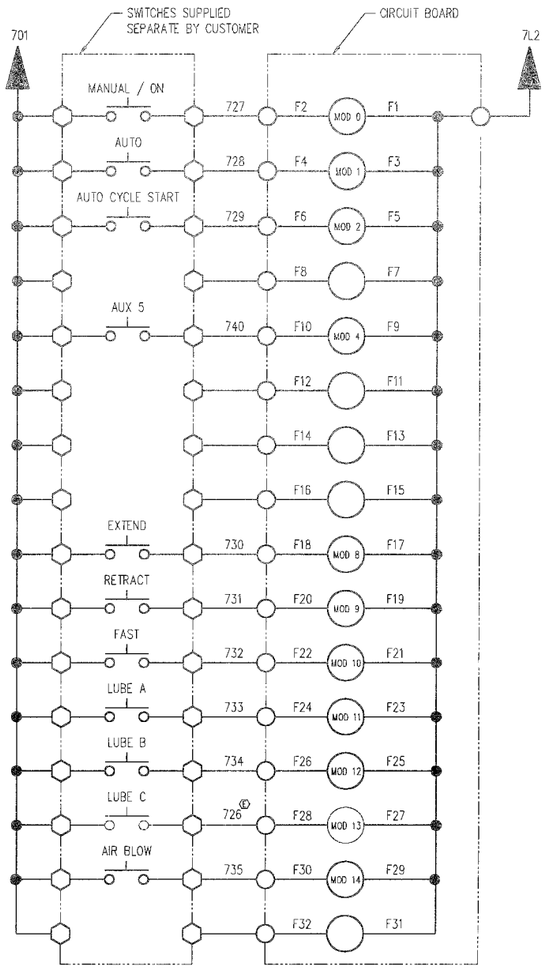

310/410 SCHEMATIC DIAGRAM

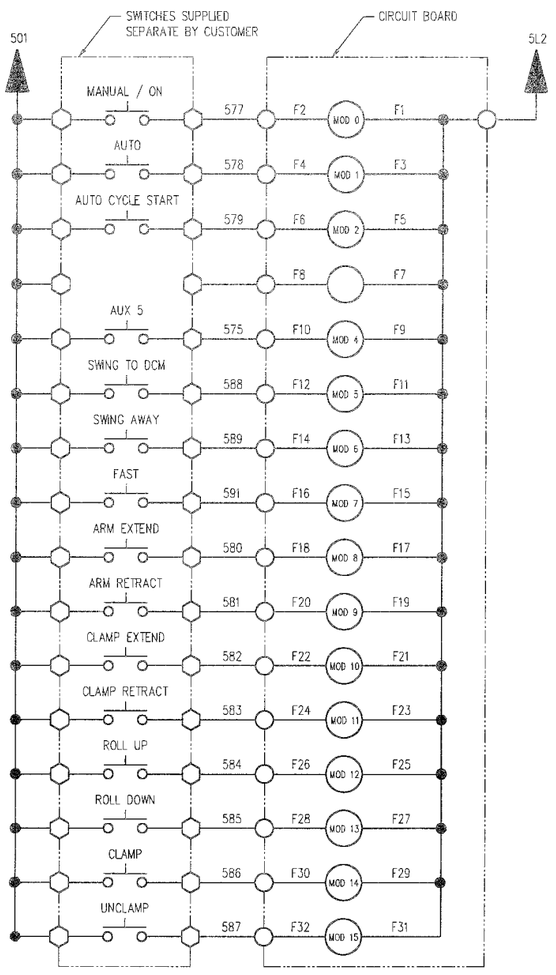

320 SCHEMATIC DIAGRAM

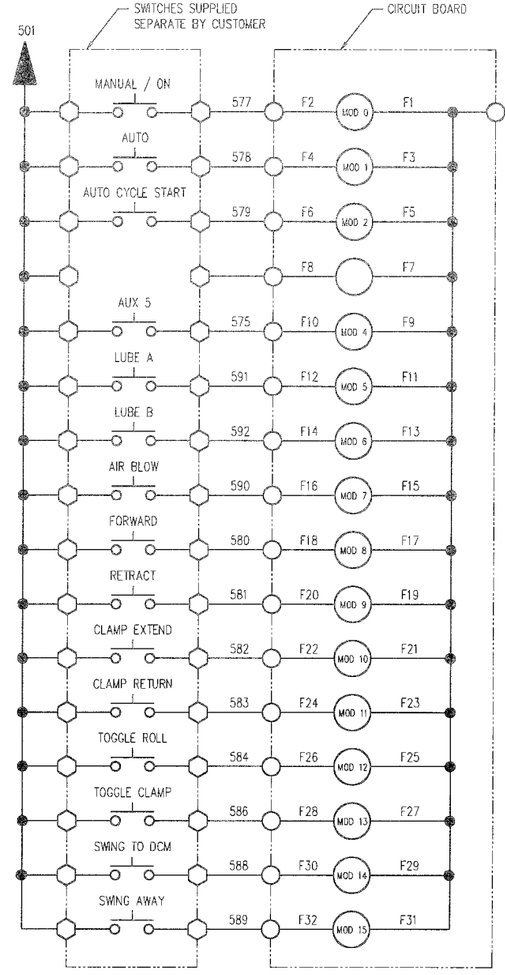

195 SCHEMATIC DIAGRAM

THESE KITS INCLUDE MOUNTING RAILS ®

305 LADLE KIT P/N-16809-100
310 RECIPROCATOR KIT P/N-16809-101
320 EXTRACTOR KIT P/N-16809-102
195 EXTRACTOR KIT P/N-16809-103
ⓓ 410 RECIPROCATOR KIT P/N-16809-104
ⓓ 405 LADLE KIT P/N-16809-105

305 LADLE LG. BOX KIT P/N-16809-110
410 RECIPROCATOR LG. BOX KIT P/N-16809-111
320 EXTRACTOR LG. BOX KIT P/N-16809-112
195 EXTRACTOR LG. BOX KIT P/N-16809-113
ⓓ 405 LADLE LG. BOX KIT P/N-16809-115

305 LADLE ADD-ON KIT P/N-16809-200
310 RECIPROCATOR ADD-ON KIT P/N-16809-201
320 EXTRACTOR ADD-ON KIT P/N-16809-202
195 EXTRACTOR ADD-ON KIT P/N-16809-203
ⓓ 410 RECIPROCATOR ADD-ON KIT P/N-16809-204
ⓓ 405 LADLE ADD-ON KIT P/N-16809-205

4. DEBURR
3. SURFACE FINISH 125
2. ALL THREADS CLASS 2A OR 2B
1. PARTS TO CONFORM TO RIMROCK CORP. ENGR. & MFG. STANDARDS
NOTES (UNLESS OTHERWISE SPECIFIED)

ER	DATE	REMARKS	LET	DR	CK
205	05.14.97	ADD 3 P.B. FOR 405 CORRECT WIRE NUMBER ON 310/410	E	JAS	
190	6.14.96	ADDED P/N'S FOR 410 AND 405	D	ACV	
233	12.11.95	CHANGED LABLE TO 310/410 FROM 310	C	AR	
223	8.22.95	ADDED PART NUMBERS FOR "LARGE BOX" INSTALLATIONS	B	AR	
091	2.27.95	CHANGED WIRE NUMBER FROM 837 TO 835	A	AR	

REVISIONS

MAT'L: SEE B.O.M.

TOLERANCES UNLESS OTHERWISE SPECIFIED
2-DIGIT DECIMALS= ±.010 FRACTIONS= ± 1/64
3-DIGIT DECIMALS= ±.005 ANGLES= ± 1/2
4-DIGIT DECIMALS= ±.0005

RIMROCK CORPORATION
1750 RIMROCK ROAD
COLUMBUS, OHIO 43219
PHONE: 614-471-5926 FAX: 614-471-1073
"RIMROCK" A Registered Trademark of Rimrock Corporation, Columbus, Ohio U.S.A.

ER CKD DATE 11.01.94 SCALE NONE PIC
CK DATE ER 167 SHEET 1 OF 2
DRAWING NO. 140D16809-100 REV E
DRAWING NAME SCHEMATIC, RELAY KIT
FOR CUSTOMER REMOTE I/O MODULES

THIS DRAWING IS THE PROPERTY OF RIMROCK CORP. AND IS FOR THE CONFIDENTIAL USE OF THE BUYER OR SUPPLIER OF THIS EQUIPMENT

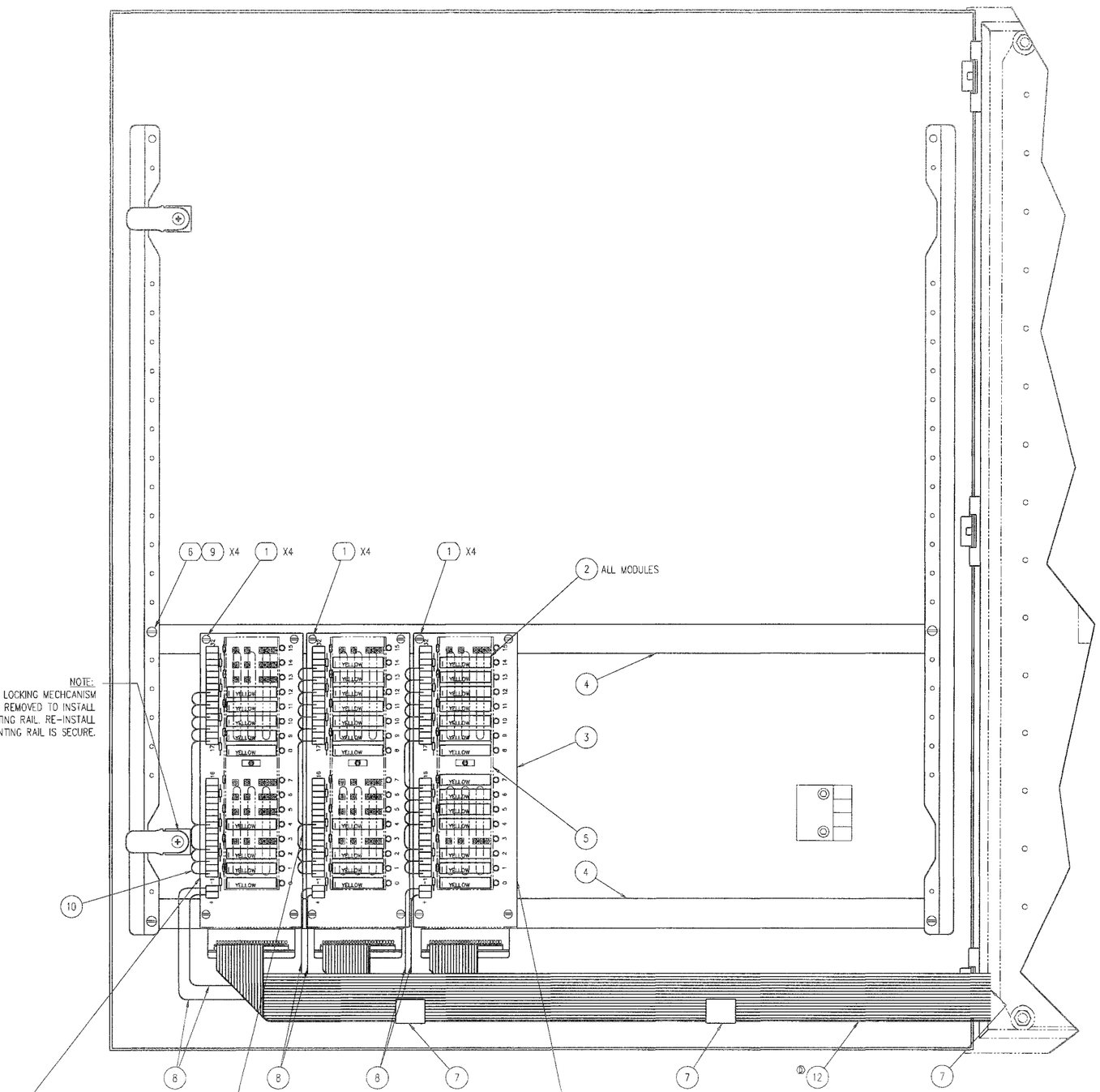

	I/O MODULE FUNCTION BY MODEL			
MODULE	305/405	310/410	320	195
MOD 0	MANUAL/ON	MANUAL/ON	MANUAL/ON	MANUAL/ON
MOD 1	AUTO	AUTO	AUTO	AUTO
MOD 2	AUTO CYCLE START	AUTO CYCLE START	AUTO CYCLE START	AUTO CYCLE START
MOD 3	–	–	–	–
MOD 4	AUX 5	AUX 5	AUX 5	AUX 5
MOD 5	–	–	SWING TO DCM	LUBE A
MOD 6	–	–	SWING AWAY	LUBE B
MOD 7	–	–	FAST	AIR BLOW
MOD 8	RETRACT	EXTEND	ARM EXTEND	FORWARD
MOD 9	FORWARD	RETRACT	ARM RETRACT	RETRACT
MOD 10	FAST	FAST	CLAMP EXTEND	CLAMP EXTEND
MOD 11	DIPPER FWD.	LUBE A	CLAMP RETRACT	CLAMP RETURN
MOD 12	DIPPER REV.	LUBE B	ROLL UP	TOGGLE ROLL
MOD 13	DIPPER LEVEL (405) Ⓒ	LUBE C	ROLL DOWN	TOGGLE CLAMP
MOD 14	DIPPER FILL (405) Ⓔ	AIR BLOW	CLAMP	SWING TO DCM
MOD 15	DIPPER POUR (405) Ⓕ	–	UNCLAMP	SWING AWAY

WIRING TABLE FOR REMOTE I/O MODULES

		REMOTE I/O FOR MODEL			
	I/O TERMINAL #	305/405	310/410	320	195
	F1	8L2	7L2	5L2	5L2
	F2	827	727	577	577
	F3	8L2	7L2	5L2	5L2
	F4	828	728	578	578
	F5	8L2	7L2	5L2	5L2
	F6	829	729	579	579
	F7	–	–	–	–
	F8	–	–	–	–
	F9	8L2	7L2	5L2	5L2
Ⓐ	F10	835	740	575	575
	F11	–	–	5L2	5L2
	F12	–	–	588	591
	F13	–	–	5L2	5L2
	F14	–	–	589	592
	F15	–	–	5L2	5L2
	F16	–	–	591	590
	F17	8L2	7L2	5L2	5L2
	F18	831	730	580	580
	F19	8L2	7L2	5L2	5L2
	F20	830	731	581	581
	F21	8L2	7L2	5L2	5L2
	F22	834	732	582	582
	F23	8L2	7L2	5L2	5L2
	F24	832	733	583	583
	F25	8L2	7L2	5L2	5L2
	F26	833	734	584	584
	F27	8L2 Ⓓ	7L2	5L2	5L2
	F28	882 Ⓒ	726 Ⓒ	585	586
	F29	8L2 Ⓔ	7L2	5L2	5L2
	F30	881 Ⓔ	735	586	588
	F31	8L2 Ⓕ	–	5L2	5L2
	F32	880 Ⓕ	–	587	589

NOTE: STANDARD BOX SHOWN

4. DEBURR
3. SURFACE FINISH 125
2. ALL THREADS CLASS 2A OR 2B
1. PARTS TO CONFORM TO RIMROCK CORP. ENGR. & MFG. STANDARDS

NOTES (UNLESS OTHERWISE SPECIFIED)

REVISIONS										REVISIONS									
ER	DATE	REMARKS	LET	DR	CK					ER	DATE	REMARKS	LET	DR	CK				
						205	05.14.97	ADDED 3 PB FOR 405 CORRECT WIRE NUMBER ON 310/410	E	JAS	MAT'L: SEE B.O.M.				ER OKG	DATE 11.02.94	SCALE NONE	PIC
						190	6.14.96	ADDED NEW P/N'S FOR 410 AND 405	D	ACV	RIMROCK® RIMROCK CORPORATION 1700 RIMROCK ROAD COLUMBUS, OHIO 43219				CK	DATE	DR 167	SHEET 2 OF 2
						290	12.11.95	CHANGED LABLE TO 310/410 FROM 310	C	AR	PHONE: 614-471-5626 FAX: 614-471-1073				DRAWING NO. 140D16809-100			REV E
						223	8.22.95	SEE SHEET 1	B	AR	® A Registered Trademark of Rimrock Corporation, Columbus, Ohio U.S.A.				DRAWING NAME WIRING & PARTS DIAGRAM			
						091	2.27.95	CHANGED WIRE NUMBER FROM 837 TO 835. ALSO ADDED JUMPERS	A	AR	TOLERANCES UNLESS OTHERWISE SPECIFIED				FOR CUSTOMER REMOTE I/O MODULES			
											2-DIGIT DECIMALS= ±.010 FRACTIONS= ±1/64				THIS DRAWING IS THE PROPERTY OF RIMROCK CORP. AND IS FOR THE CONFIDENTIAL USE OF THE BUYER OR SUPPLIER OF THIS EQUIPMENT			
											3-DIGIT DECIMALS= ±.005 ANGLES= ±1/2							
											4-DIGIT DECIMALS= ±.0005							

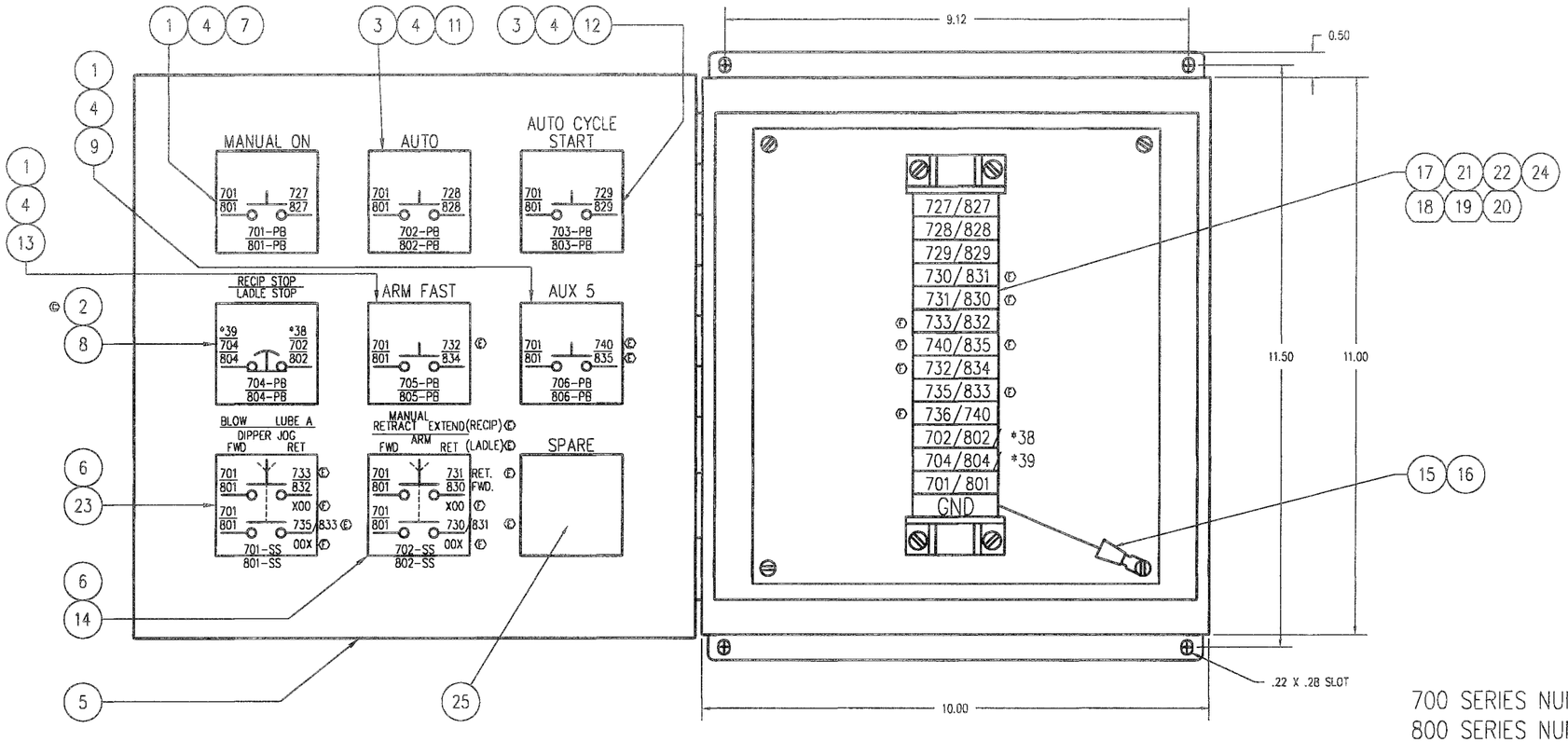

700 SERIES NUMBER ARE FOR RECIPROCATORS.
800 SERIES NUMBERS ARE FOR LADLES.
NUMBERS MARKED WITH AN * ARE FOR
TRIANGLE CONTROLLED MACHINES.

LADLE PART NUMBER 11367
RECIP PART NUMBER 11367-03

4. DEBURR
3. SURFACE FINISH 125
2. ALL THREADS CLASS 2A OR 2B
1. PARTS TO CONFORM TO RIMROCK CORP. ENGR. & MFG. STANDARDS
NOTES (UNLESS OTHERWISE SPECIFIED)

DR	DATE	REMARKS	LET	DR	CK
091	2.27 95	CORRECTED WIRE NUMBERS	F	AR	

REVISIONS

DR	DATE	REMARKS	LET	DR	CK
182	10.17 94	CORRECTED WIRE NUMBERS AND TAG DESCRIPTIONS	E	DRW	
173	10.11. 94	ADDED RECIP WIRE NUMBERS AND RECIP NAMEPLATES	D	DRW	
162	9.29. 94	ADDED STOP P.B.	C	RM	
059	3.17. 93	ADD PLUG AND RED WIRE CHANGED TAGS	B	DEB	
475	01.17 93	CHANGE DRAWING TO REFLECT CORRECT TAGS	A	RM	

REVISIONS

MAT'L: SEE B.O.M'S

RIMROCK®
RIMROCK CORPORATION
1700 RIMROCK ROAD
P.O. BOX 18687
COLUMBUS, OHIO 43218
PHONE: 614-471-5626 TELEX: 245-401 FAX: 614-471-5665
® A Registered Trademark of Rimrock Corporation, Columbus, Ohio U.S.A.

TOLERANCES UNLESS OTHERWISE SPECIFIED
2-DIGIT DECIMALS= ±.010 FRACTIONS= ±1/64
3-DIGIT DECIMALS= ±.005 ANGLES= ±1/2
4-DIGIT DECIMALS= ±.0005

DR WM | DATE 12.14.90 | SCALE 3/4 | PIC
CK | DATE | ER 454 | SHEET OF
DRAWING NO. 306D11367 | REV F
DRAWING NAME REMOTE CONTROL BOX ASSEMBLY
FOR 305/310 REMOTE RELAY KIT

THIS DRAWING IS THE PROPERTY OF RIMROCK CORP. AND IS FOR THE CONFIDENTIAL USE OF THE OWNER OR SUPPLIER OF THIS EQUIPMENT

ITEM	DESCRIPTION	QTY	PART NUMBER
4	CONNECTOR – STRAIGHT	2	01715
3	14GA. RED WIRE	SEE TABLE	02898-1
2	14GA. GREEN WIRE	SEE TABLE	02898-5
1	EXTRA FLEX CONDUIT	SEE TABLE	02845

LENGTH	B.O.M. NUMBER
30'	11367-30
40'	11367-40
50'	11367-50
60'	11367-60

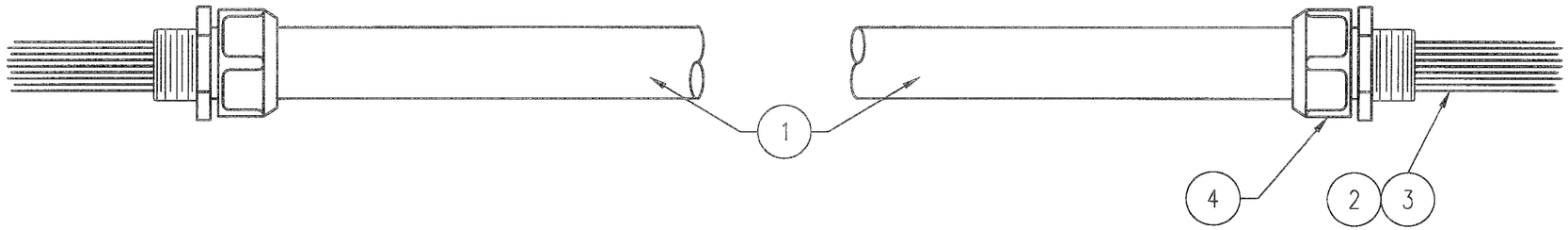

CABLE NO.	QTY	PART NUMBER – COLOR	LENGTH	WIRE NUMBERS USED
11367-60	11	02898 1 – RED	65'	38,39,801,802,804,827-835
	1	02898 5 – GREEN	65'	GND
	1	02845 – CONDUIT	60'	
11367-50	11	02898 1 – RED	55'	38,39,801,802,804,827-835
	1	02898 5 – GREEN	55'	GND
	1	02845 – CONDUIT	50'	
11367-40	11	02898 1 – RED	45'	38,39,801,802,804,827-835
	1	02898 5 – GREEN	45'	GND
	1	02845 – CONDUIT	40'	
11367-30	11	02898 1 – RED	35'	38,39,801,802,804,827-835
	1	02898 5 – GREEN	35'	GND
	1	02845 – CONDUIT	30'	

4. DEBURR
3. SURFACE FINISH 125
2. ALL THREADS CLASS 2A OR 2B
1. PARTS TO CONFORM TO RIMROCK CORP. ENGR. & MFG. STANDARDS

NOTES (UNLESS OTHERWISE SPECIFIED)

ER	DATE	REMARKS	LET	DR	CK
173	10.11 94	CORRECTED WIRE NUMBERS USED AND ADDED TRIANGLE CONTROL NUMBERS	B	DRW	
888	11.12. 92	CORRECTED DRAWING AND B.O.M	A	DW	

REVISIONS

MAT'L:

RIMROCK®
* RIMROCK CORPORATION
1700 RIMROCK ROAD
COLUMBUS, OHIO 43219
*PHONE: 614-471-5926 FAX: 614-471-1073

*A Registered Trademark of Rimrock Corporation, Columbus, Ohio U.S.A.

TOLERANCES UNLESS OTHERWISE SPECIFIED
2-DIGIT DECIMALS= ±.010 FRACTIONS= ±1/64
3-DIGIT DECIMALS= ±.005 ANGLES= ±1/2
4-DIGIT DECIMALS= ±.0005

DR WM	DATE 12.17.90	SCALE NONE	PIC
CK	DATE	ER 454	SHEET OF

DRAWING NO. 306B11367-02 REV B

DRAWING NAME REMOTE BOX CABLE ASSEMBLY

FOR LADLE REMOTE CONTROL BOX

THIS DRAWING IS THE PROPERTY OF RIMROCK CORP. AND IS FOR THE CONFIDENTIAL USE OF THE BUYER OR SUPPLIER OF THIS EQUIPMENT

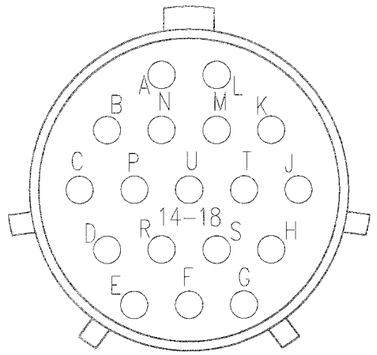

ENCODER CONNECTOR Ⓚ

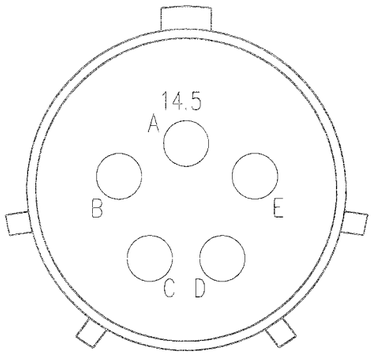

MOTOR CONNECTOR Ⓜ

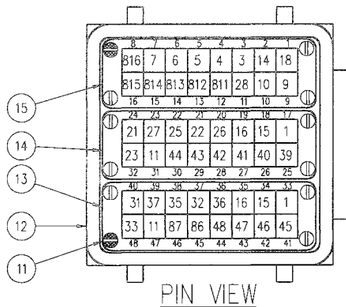

PIN VIEW

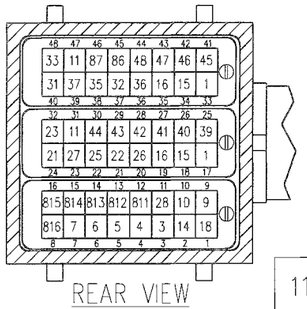

REAR VIEW

11118-650 50 FT	CABLE 6 COND.	53'	02915-17
	WIRE 18 AWG	54'	02898-62
	6-PAIR TWISTED	53'	02915-23
	CABLE 14-4 PVC	53'	02829-1
	CONDUIT 1 1/4"	50'	02083-4
11118-645 45 FT	CABLE 6 COND.	48	02915-17
	WIRE 18 AWG	49'	02898-62
	6-PAIR TWISTED	48'	02915-23
	CABLE 14-4 PVC	48'	02829-1
	CONDUIT 1 1/4"	45'	02083-4
11118-640 40 FT	CABLE 6 COND.	43'	02915-17
	WIRE 18 AWG	44'	02898-62
	6-PAIR TWISTED	43'	02915-23
	CABLE 14-4 PVC	43'	02829-1
	CONDUIT 1 1/4"	40'	02083-4
11118-635 35 FT	CABLE 6 COND.	38'	02915-17
	WIRE 18 AWG	39'	02898-62
	6-PAIR TWISTED	38'	02915-23
	CABLE 14-4 PVC	38'	02829-1
	CONDUIT 1 1/4"	35'	02083-4
11118-633 33 FT	CABLE 6 COND.	36'	02915-17
	WIRE 18 AWG	37'	02898-62
	6-PAIR TWISTED	36'	02915-23
	CABLE 14-4 PVC	36'	02829-1
	CONDUIT 1 1/4"	33'	02083-4
PART NO. & LENGTH	DESCRIPTION	QTY	PART NO.

11118-630 30 FT	CABLE 6 COND.	33'	02915-17
	WIRE 18 AWG	34'	02898-62
	6-PAIR TWISTED	33'	02915-23
	CABLE 14-4 PVC	33'	02829-1
	CONDUIT 1 1/4"	30'	02083-4
11118-625 25 FT	CABLE 6 COND.	28'	02915-17
	WIRE 18 AWG	29'	02898-62
	6-PAIR TWISTED	28'	02915-23
	CABLE 14-4 PVC	28'	02829-1
	CONDUIT 1 1/4"	25'	02083-4
11118-620 20 FT	CABLE 6 COND.	23'	02915-17
	WIRE 18 AWG	24'	02898-62
	6-PAIR TWISTED	23'	02915-23
	CABLE 14-4 PVC	23'	02829-1
	CONDUIT 1 1/4"	20'	02083-4
11118-615 15 FT	CABLE 6 COND.	18'	02915-17
	WIRE 18 AWG	19'	02898-62
	6-PAIR TWISTED	18'	02915-23
	CABLE 14-4 PVC	18'	02829-1
	CONDUIT 1 1/4"	15'	02083-4
11118-610 10 FT	CABLE 6 COND.	13'	02915-17
	WIRE 18 AWG	14'	02898-62
	6-PAIR TWISTED	13'	02915-23
	CABLE 14-4 PVC	13'	02829-1
	CONDUIT 1 1/4"	10'	02083-4
11118-604 4 FT	CABLE 6 COND.	7'	02915-17
	WIRE 18 AWG	8'	02898-62
	6-PAIR TWISTED	7'	02915-23
	CABLE 14-4 PVC	7'	02829-1
	CONDUIT 1 1/4"	4'	02083-4
DASH NO & LENGTH	DESCRIPTION	QTY	PART NO.

DIPPER MOTOR CABLE CONNECTIONS				
EPIC PIN#	WIRE#	CANNON PIN#	COLOR	FUNCTION
8	816	B	ORANGE	MOTOR C(3)
16	815	C	BLACK	MOTOR B(2)
15	814	A	RED	MOTOR A(1)
CASE	GND	D	BLUE	GROUND

ITEM	DESCRIPTION	QTY	PART NUMBER
27	RING TERMINAL 18 GA.	2	04727-3
26	2 PIN RECEPTACLE	1	02087-52
25	PIN CONTACT	2	02087-48
24	SOCKET CONTACT	15	02087-49
23	2 SOCKET PLUG	1	02087-53
22	3 SOCKET PLUG	1	02087-55
21	6 SOCKET PLUG	2	02087-61
20			
19	1/4" HEAT SHRINK YELLOW	3"	09810-10
18	1/4" HEAT SHRINK RED	3"	09810-12
17	DISC ADAPTER 36mm – 1 1/4"	1	11360-24
16	DISC ENLARGER HUB 29mm–36mm	1	11360-23
15	QUICK DISCONNECT PLUG #33–#48	1	11360-52
14	QUICK DISCONNECT PLUG #17–#32	1	11360-51
13	QUICK DISCONNECT PLUG #1–#16	1	11360-50
12	QUICK DISCONNECT HOOD	1	11360-59
11	CODING PIN	2	11360-16
10	3/8" HEAT SHRINK BLACK	60"	09810-2
⑨	PROX CABLE ASSY, ARM	1	11118-7
⑧	PROX CABLE ASSY, DIPPER	1	11118-6
7	CABLE, 6 CONDUCTOR	TAB x2	02915-17
6	WIRE, 18 AWG, BLUE	TAB x5	02898-62
5	CABLE, 6 TWISTED PAIR-SHEILDED	TAB x2	02915-23
4	CABLE 14-4 PVC	TAB x2	02829-1
3	KELLEMS 1 1/4	1	08395-5
2	CONNECTOR 1 1/4" STRAIGHT	2	02103-5
1	CONDUIT – 1 1/4" SEALTIGHT	TAB	02083-4

ARM MOTOR CABLE CONNECTIONS				
EPIC PIN#	WIRE#	CANNON PIN#	COLOR	FUNCTION
14	813	B	ORANGE	MOTOR C(3)
13	812	C	BLACK	MOTOR B(2)
12	811	A	RED	MOTOR A(1)
CASE	GND	D	BLUE	GROUND

ARM HALL EFFECT / ENCODER CABLE CONNECTIONS				
EPIC PIN#	WIRE#	CANNON PIN#	WIRE & COLOR	FUNCTION
–	24	HEAT SHRINK	ENCODER / DRAIN (PAIR 1)	DRAIN / SHIELD
18	15	K	ENCODER / WHITE (PAIR 1)	+5VDC
19	16	T	ENCODER / BLACK (PAIR 1)	5VDC COMM
20	26	HEAT SHRINK	ENCODER / DRAIN (PAIR 2)	DRAIN / SHIELD
21	22	N	ENCODER / RED (PAIR 2)	B+
22	25	P	ENCODER / BLACK (PAIR 2)	B–
23	27	HEAT SHRINK	ENCODER / DRAIN (PAIR 3)	DRAIN / SHIELD
24	21	B	ENCODER / GREEN (PAIR 3)	A+
32	23	C	ENCODER / BLACK (PAIR 3)	A–
29	43	HEAT SHRINK	HALL / DRAIN (PAIR 4)	DRAIN / SHIELD
30	44	E	HALL / BLUE (PAIR 4)	HALL–1
30	44	E	HALL / BLACK (PAIR 4)	HALL–1
25	39	HEAT SHRINK	HALL / DRAIN (PAIR 5)	DRAIN / SHIELD
26	40	F	HALL / YELLOW (PAIR 5)	HALL–2
26	40	F	HALL / BLACK (PAIR 5)	HALL–2
27	41	HEAT SHRINK	HALL / DRAIN (PAIR 6)	DRAIN / SHIELD
28	42	G	HALL / BROWN (PAIR 6)	HALL–3
28	42	G	HALL / BLACK (PAIR 6)	HALL–3

DIPPER HALL EFFECT / ENCODER CABLE CONNECTIONS				
EPIC PIN#	WIRE#	CANNON PIN#	WIRE & COLOR	FUNCTION
–	34	HEAT SHRINK	ENCODER / DRAIN (PAIR 1)	DRAIN / SHIELD
34	15	K	ENCODER / WHITE (PAIR 1)	+5VDC
35	16	T	ENCODER / BLACK (PAIR 1)	5VDC COMM
36	36	HEAT SHRINK	ENCODER / DRAIN (PAIR 2)	DRAIN / SHIELD
37	32	N	ENCODER / RED (PAIR 2)	B+
38	35	P	ENCODER / BLACK (PAIR 2)	B–
39	37	HEAT SHRINK	ENCODER / DRAIN (PAIR 3)	DRAIN / SHIELD
40	31	B	ENCODER / GREEN (PAIR 3)	A+
48	33	C	ENCODER / BLACK (PAIR 3)	A–
45	86 Ⓚ	HEAT SHRINK	HALL / DRAIN (PAIR 4)	DRAIN / SHIELD
46	87 Ⓚ	E	HALL / BLUE (PAIR 4)	HALL–1
46	87 Ⓚ	E	HALL / BLACK (PAIR 4)	HALL–1
41	45	HEAT SHRINK	HALL / DRAIN (PAIR 5)	DRAIN / SHIELD
42	46	F	HALL / YELLOW (PAIR 5)	HALL–2
42	46	F	HALL / BLACK (PAIR 5)	HALL–2
43	47	HEAT SHRINK	HALL / DRAIN (PAIR 6)	DRAIN / SHIELD
44	48	G	HALL / BROWN (PAIR 6)	HALL–3
44	48	G	HALL / BLACK (PAIR 6)	HALL–3

PROBE CABLE CONNECTIONS				
EPIC PIN#	COLOR	WIRE#	PLUG PIN#	FUNCTION
1	BLUE	18	A	COMMON PROBE
9	BLUE	9	B	METAL PROBE
10	BLUE	10	C	HI METAL PROBE

BRAKE CABLE CONNECTIONS				
EPIC PIN#	COLOR	WIRE#	PLUG PIN#	FUNCTION
11	BLUE	28	A	ARM BRAKE
47	BLUE	11	B	24VDC COMM

DIPPER PROX SWITCH (YELLOW) CABLE CONNECTIONS					
EPIC PIN#	COLOR	WIRE#	PLUG PIN#	PROX WIRE COLOR	FUNCTION
3	ORANGE	3	B	BLACK	DIP LEVEL
6	GREEN	6	C	BLACK	DIP REV OT
7	BROWN	7	D	BLACK	DIP FWD OT
33	RED	1	A	BROWN (+ ALL)	+24VDC
47	BLACK	11	F	BLUE (– ALL)	24VDC COMM

ARM PROX SWITCH (RED) CABLE CONNECTIONS					
EPIC PIN#	COLOR	WIRE#	PLUG PIN#	PROX WIRE COLOR	FUNCTION
5	ORANGE	5	B	BLACK	ARM HOME
4	GREEN	4	C	BLACK	ARM RET OT
2	BROWN	14	D	BLACK	ARM FWD OT
17	RED	1	A	BROWN (+ ALL)	+24VDC
31	BLACK	11	F	BLUE (– ALL)	24VDC COMM

NOTES (UNLESS OTHERWISE SPECIFIED)
1. PARTS TO CONFORM TO RIMROCK CORP. ENGR. & MFG. STANDARDS
2. ALL THREADS CLASS 2A OR 2B
3. SURFACE FINISH 125
4. DEBURR

ER	DATE	REMARKS	LET	DR	CK
0425	6.9 99	CHANGED PARTS INTO ASSEMBLIES	I	SME	
423	5-20 98	CHANGED WIRE LENGTHS AND SOME DESCRIPTIONS	H	MAK	
201	3.16 98	ADDED END VIEWS OF CABLES	G	MJ	
569	12.12 97	ADDED P/N 11118-604	F	HDA	
333	7-28 97	CHANGED EPIC PIN WIRE NUMBERS ON PIN 45 TO WIRE #86 AND PIN 46 TO WIRE #87	E	MAK	
320	7.16 97	WIRE # 28 WAS WIRE # 24	D	HDA	
179	6.6 96	CHANGED CABLE LENGTHS AND UPDATED TO AS BUILT.	C	AR	
191	5.16 96	CORRECTED WIRE NUMBERS FOR THE DIPPER DRIVE CARD HALL EFFECT CABLE.	B	AR	
191	11.10 95	CHANGED PIN ARRANGEMENT ON EPIC CONNECTOR. RENAMED FUNNATIONS.	A	ACV	

REVISIONS

MAT'L: SEE ABOVE

RIMROCK CORPORATION 1700 RIMROCK ROAD COLUMBUS, OHIO 43219

PHONE: 614-471-5026 FAX: 614-471-1073

® A Registered Trademark of Rimrock Corporation, Columbus, Ohio U.S.A.

TOLERANCES UNLESS OTHERWISE SPECIFIED
2-DIGIT DECIMALS= ±.010 FRACTIONS= ± 1/64
3-DIGIT DECIMALS= ±.005 ANGLES= ±1/2
4-DIGIT DECIMALS= ±.0005

DR	AOR
DATE	7.26.95
SCALE	NONE
PIC	
CK	
DATE	
ER	191
SHEET	1 OF 1
DRAWING NO.	406D11118-600
REV	1
DRAWING NAME	WIRING LAYOUT FOR SDLM MAIN CONTROL CABLE
FOR	TRIANGLE CONTROLS

THIS DRAWING IS THE PROPERTY OF RIMROCK CORP. AND IS FOR THE CONFIDENTIAL USE OF THE BUYER OR SUPPLIER OF THIS EQUIPMENT.

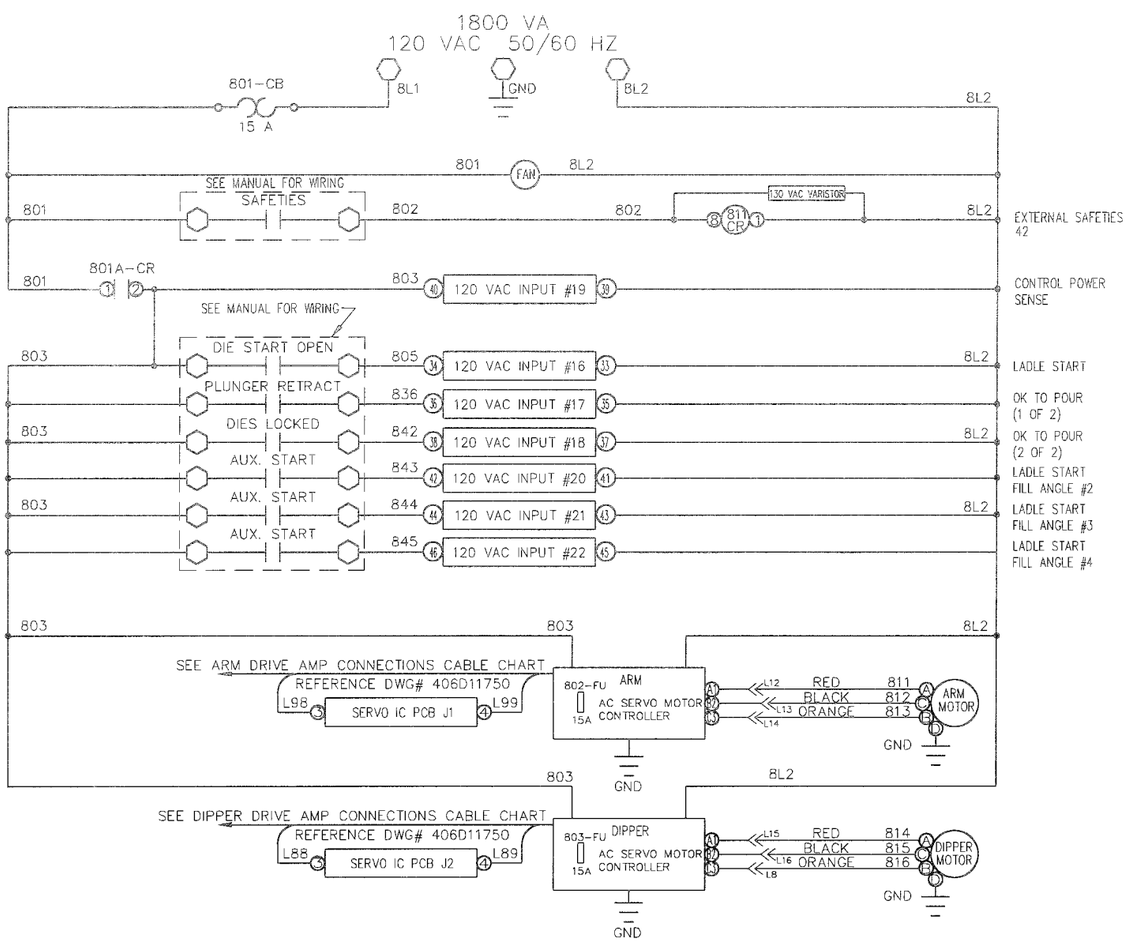

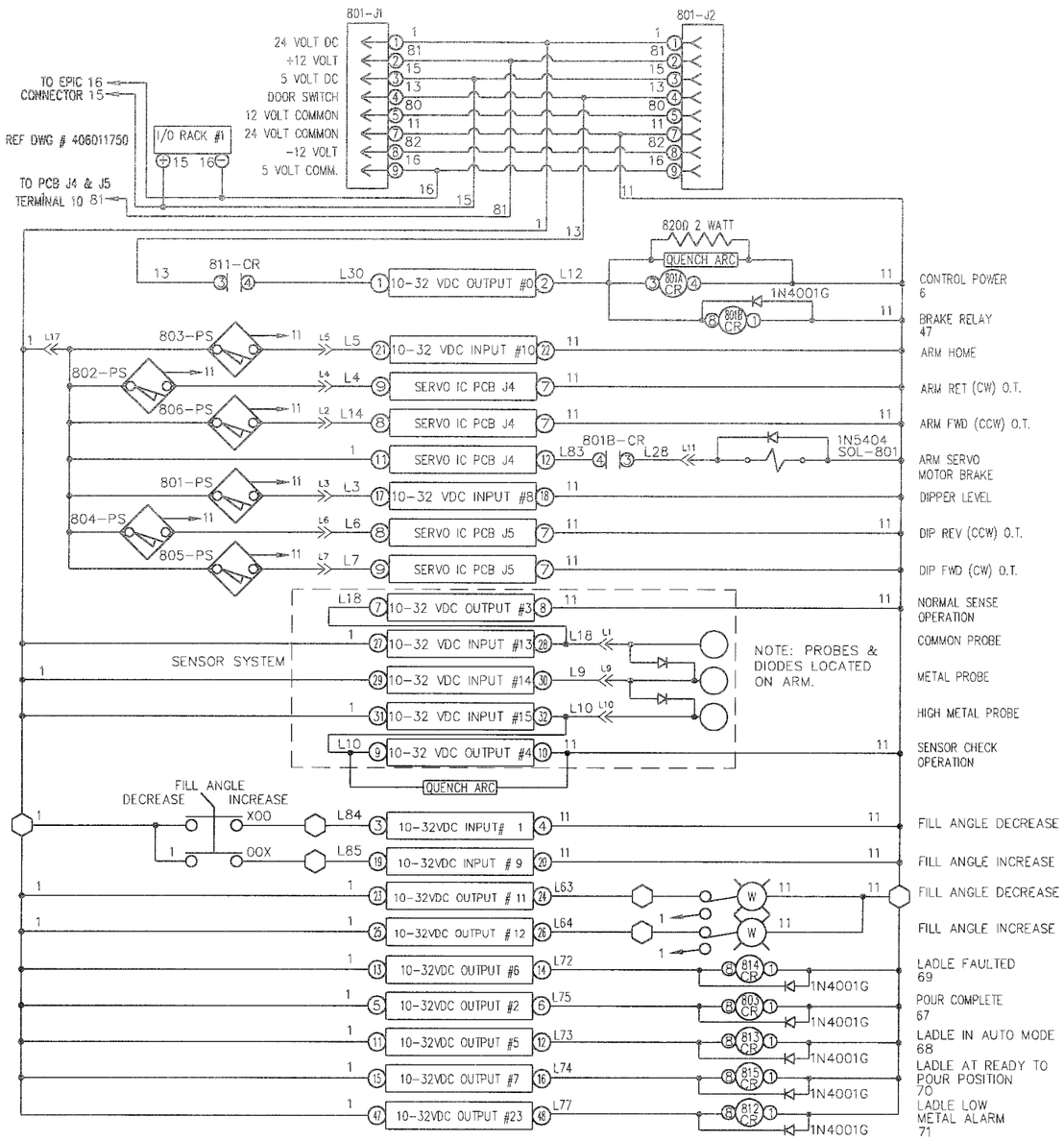

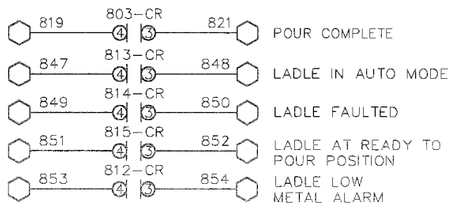

NOTE: IN SOME CASES IT MIGHT BE NECESSARY TO PLACE A 130 VAC VARISTOR ACROSS THE LOAD BEING ENERGIZED BY 803-CR.

L(X) << DEPICTS EPIC CONNECTOR PIN NUMBERS

WIRE NUMBERS PREFIXED WITH "L" DEPICT LADLE SPECIFIC WIRE NUMBERS.

P/N 11850-19

4. DEBURR
3. SURFACE FINISH 125
2. ALL THREADS CLASS 2A OR 2B
1. PARTS TO CONFORM TO RIMROCK CORP. ENGR. & MFG. STANDARDS

NOTES (UNLESS OTHERWISE SPECIFIED)

ER	DATE	REMARKS	LET	DR	CK
	04/7	6.18.99	CORRECTED WIRE #'S GOING TO COIL OF OUTPUT RELAYS CR-803,812,814,815.	C	JPS
	0137	3.22.99	UPDATED DRAWINGS MADE MISC. CORRECTIONS	B	JPS
	1005	11.19.98	MOVED TEXT AND CORRECTED CONTACT #'S ON OUTPUTS CR-803,812,813,814,815	A	DLC

REVISIONS

MAT'L: SEE B.O.M.

RIMROCK CORPORATION
1700 RIMROCK ROAD
COLUMBUS, OHIO 43219
PHONE: 614-471-5026 FAX: 614-471-1073
A Registered Trademark of Rimrock Corporation, Columbus, Ohio U.S.A.

TOLERANCES UNLESS OTHERWISE SPECIFIED
2-DIGIT DECIMALS= ±.010 FRACTIONS= ±1/64
3-DIGIT DECIMALS= ±.005 ANGLES= ±1/2
4-DIGIT DECIMALS= ±.0005

DR MAK DATE 3.30.98 SCALE FULL PIC
CK DATE CR 599 SHEET 1 OF 3
DRAWING NO. 406D11850-19 REV C
DRAWING NAME LADLE MODULE-SCHEMATIC
405 LADLE
FOR TRIANGLE CONTROLS

THIS DRAWING IS THE PROPERTY OF RIMROCK CORP. AND IS FOR THE CONFIDENTIAL USE OF THE BUYER OR SUPPLIER OF THIS EQUIPMENT.

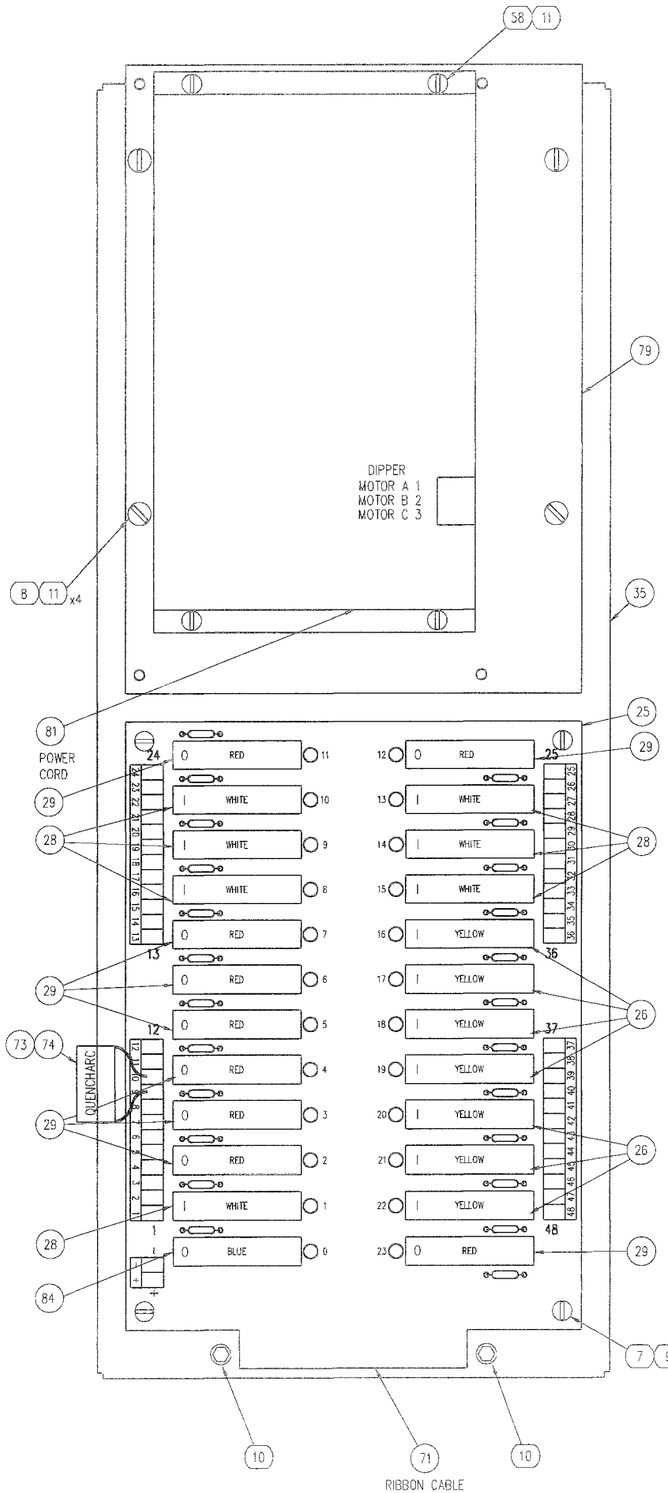

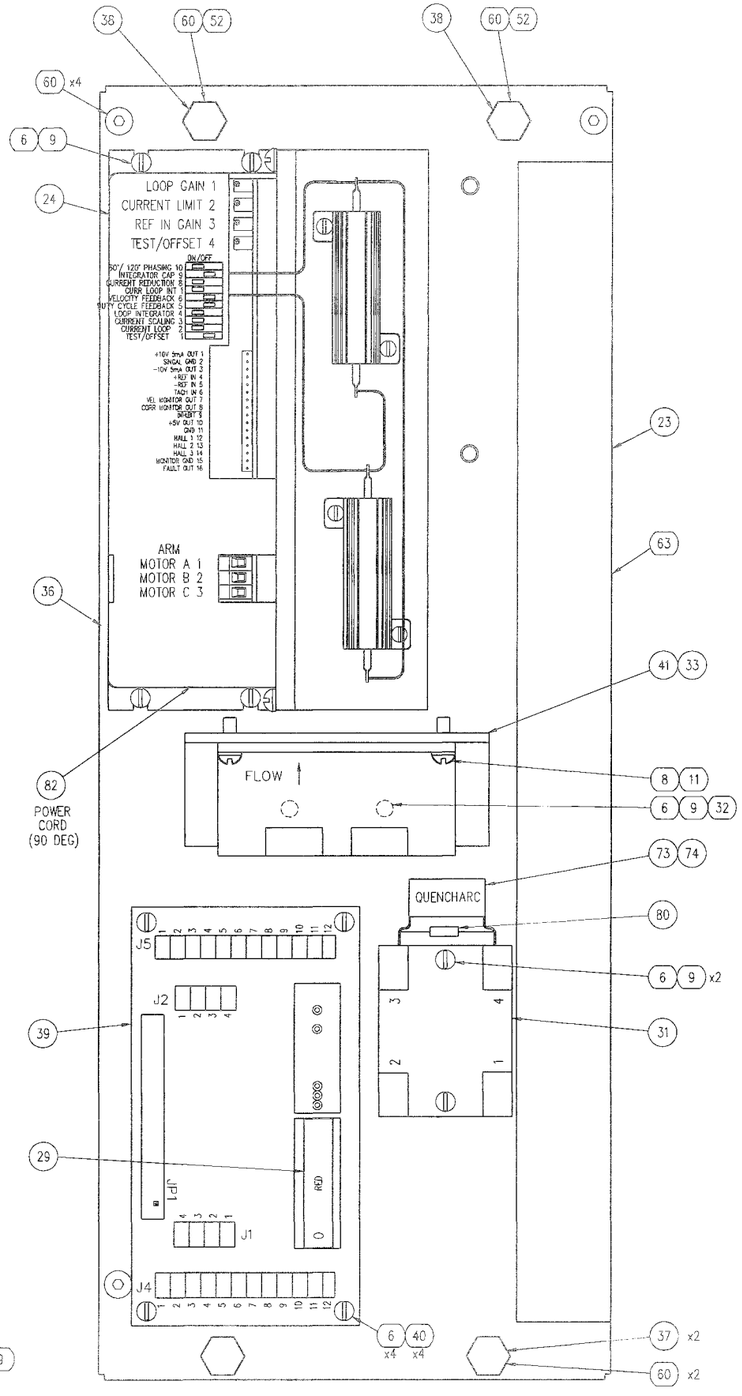

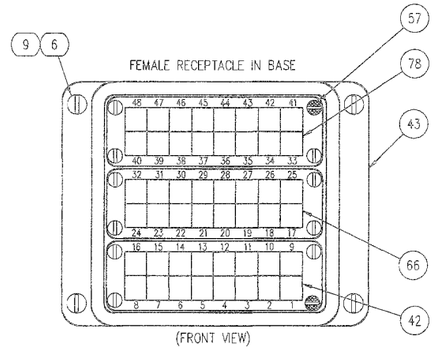

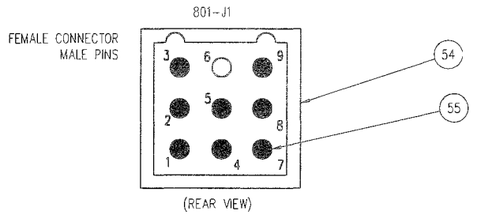

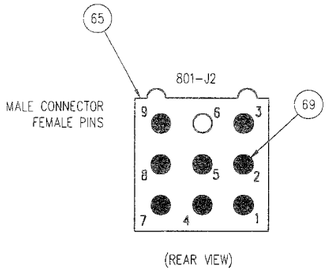

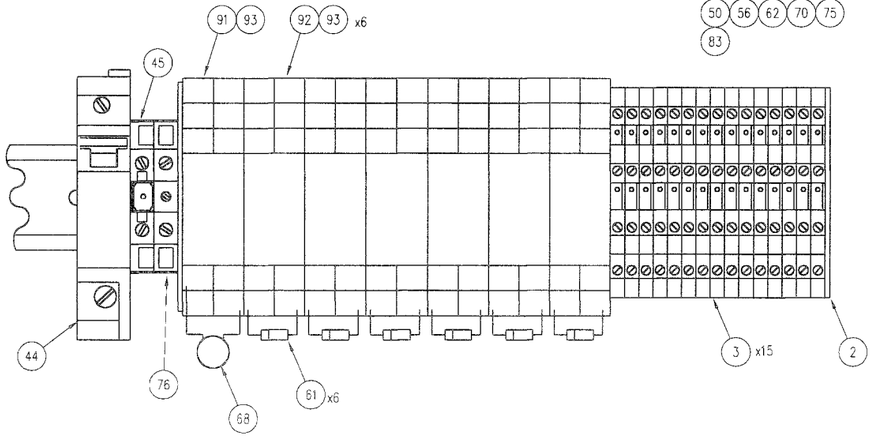

P/N-11850-19

NOTES (UNLESS OTHERWISE SPECIFIED)
1. PARTS TO CONFORM TO RIMROCK CORP. ENGR. & MFG. STANDARDS
2. ALL THREADS CLASS 2A OR 2B
3. SURFACE FINISH 125
4. DEBURR

ER	DATE	REMARKS	LET	OR	CK
0447	6.18.99	CORRECTED WIRE #'S GOING TO COIL OF OUTPUT RELAYS CR-803,812,814,815.	C	JPS	
0137	3.22.99	UPDATED DRAWING MADE MISC. CHANGES	B	JPS	
1005	11.19.98	MOVED TEXT AND CORRECTED CONTACT #'S ON OUTPUTS CR-803,812,813,814,815, PCI	A	DLO	

REVISIONS

MAT'L: SEE B.O.M.

RIMROCK CORPORATION
1700 RIMROCK ROAD
COLUMBUS, OHIO 43219
PHONE: 614-471-5628 FAX: 614-471-1073
® A Registered Trademark of Rimrock Corporation, Columbus, Ohio U.S.A.

TOLERANCES UNLESS OTHERWISE SPECIFIED
2-DIGIT DECIMALS= ± .010 FRACTIONS= ± 1/64
3-DIGIT DECIMALS= ± .005 ANGLES= ± 1/2
4-DIGIT DECIMALS= ± .0005

DR MAH DATE 3.30.98 SCALE FULL PIC
CK DATE ER 599 SHEET 2 OF 3
DRAWING NO. 406D11850-19 REV C
DRAWING NAME LADLE MODULE-B.O.M.
405 LADLE
FOR TRIANGLE CONTROLS

THIS DRAWING IS THE PROPERTY OF RIMROCK CORP. AND IS FOR THE CONFIDENTIAL USE OF THE BUYER OR SUPPLIER OF THIS EQUIPMENT.

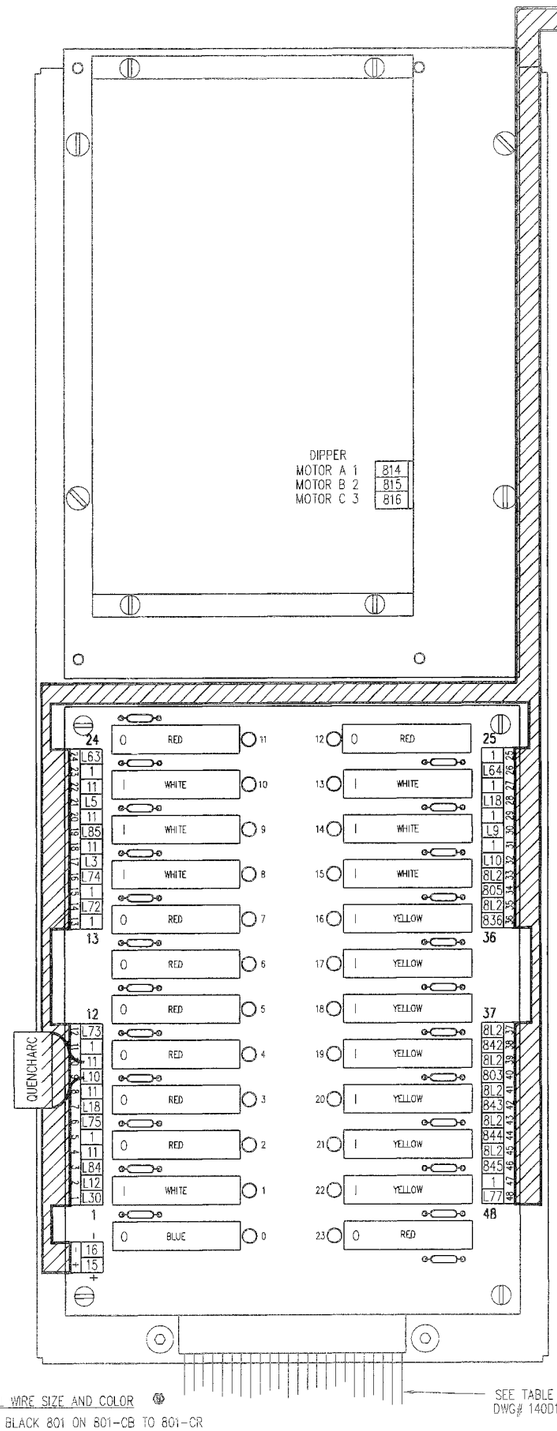

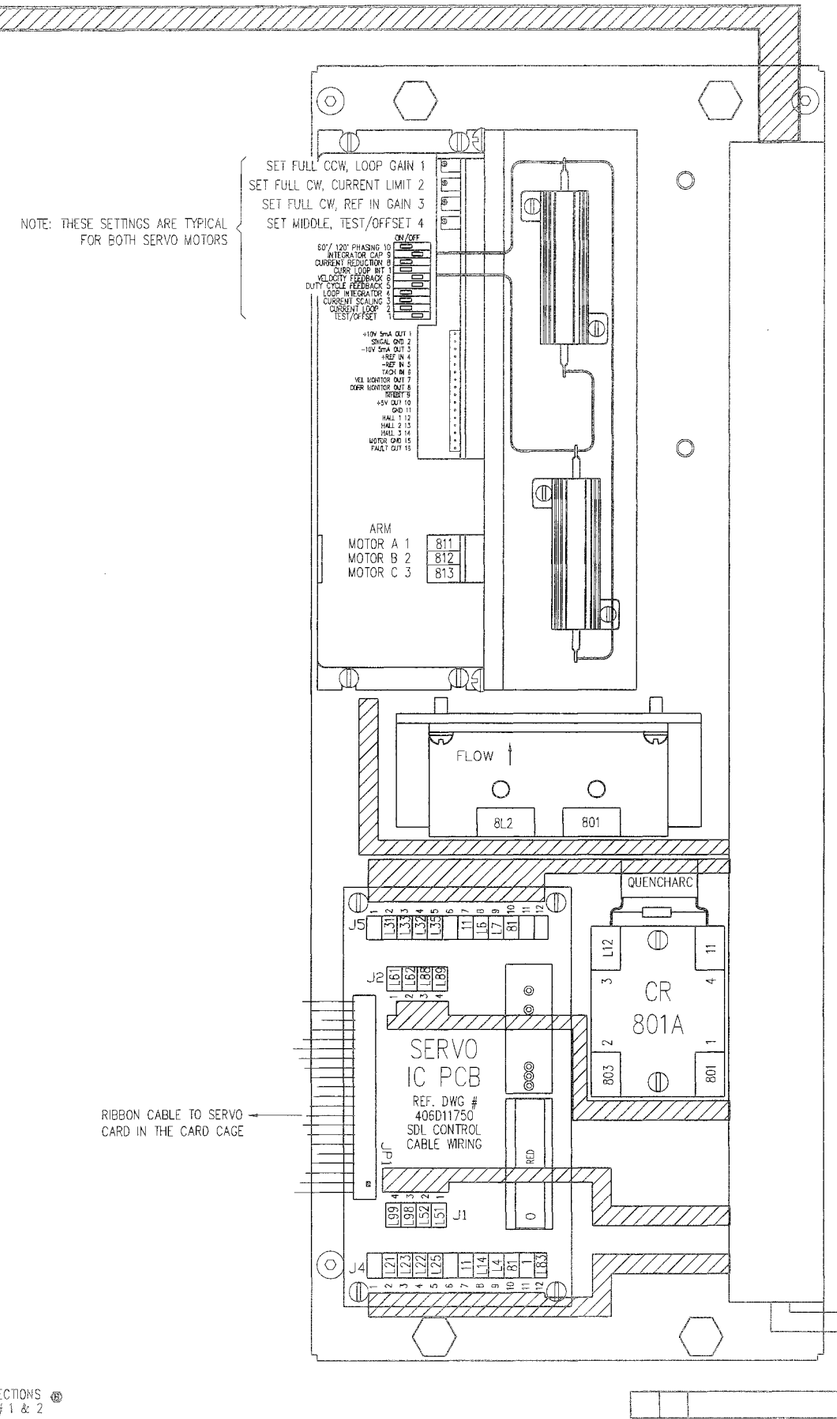

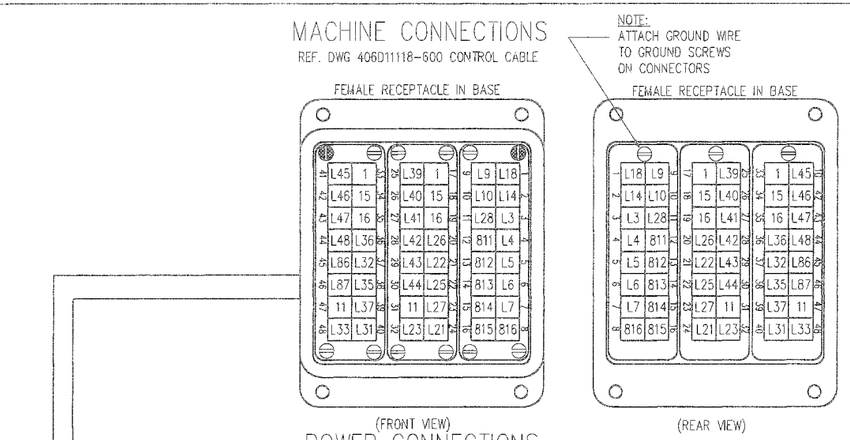

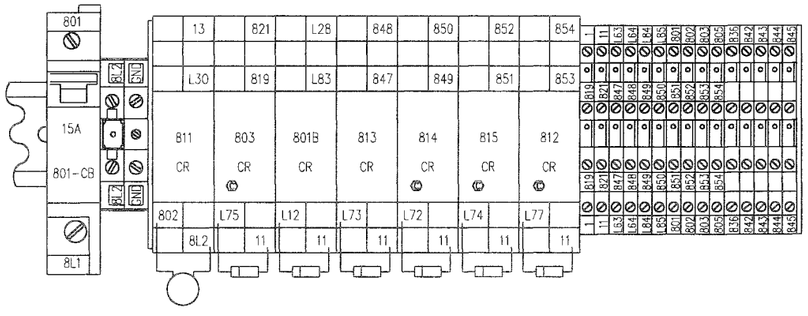

P/N-11850-19

CRITICAL WIRE SIZE AND COLOR Ⓜ

12 AWG BLACK 801 ON 801-CB TO 801-CR
14 AWG 811,812,813,814,815,816
14 AWG GREEN GND
20 AWG WHITE 8L2
20 AWG YELLOW: 819,821,847,848,849,850,851,852, 853, 854
20 AWG RED ALL REMAINING 120 VOLT AC WIRES
20 AWG BLUE ALL 5-24 VOLTAGE WIRES THAT DO NOT USE CABLES

SEE TABLE FOR CABLE CONNECTIONS Ⓜ DWG# 140D11850-100, SHEET# 1 & 2

4. DEBURR
3. SURFACE FINISH 125
2. ALL THREADS CLASS 2A OR 2B
1. PARTS TO CONFORM TO RIMROCK CORP. ENGR. & MFG. STANDARDS

NOTES (UNLESS OTHERWISE SPECIFIED)

DR	DATE	REMARKS	LET	DR	CK
	04 47	6.18 99	CORRECTED WIRE #'S GOING TO COIL OF OUTPUT RELAYS CR-803,812,814,815.	C	JPS
	01 37	3.22 99	UPDATED DRAWINGS MADE MISC. CORRECTIONS	B	JPS
	10 05	11.15 98	MOVED TEXT AND CORRECTED CONTACT #'S ON OUTPUTS CR-803,812,813,814,815, PG1	A	DLG

REVISIONS

MAT'L: SEE B.O.M.

RIMROCK CORPORATION 1700 RIMROCK ROAD COLUMBUS, OHIO 43228
PHONE: 614-471-5928 FAX: 614-471-1073
* A Registered Trademark of Rimrock Corporation, Columbus, Ohio U.S.A.

TOLERANCES UNLESS OTHERWISE SPECIFIED
2-DIGIT DECIMALS= ±.010 FRACTIONS= ±1/64
3-DIGIT DECIMALS= ±.005 ANGLES= ±1/2
4-DIGIT DECIMALS= ±.0005

DR MAR DATE 3.30.98 SCALE FULL PIC
CK DATE CR 599 SHEET 3 of 3
DRAWING NO. 406D11850-19 REV C
DRAWING NAME LADLE MODULE-WIRING
405 LADLE
FOR TRIANGLE CONTROLS

THIS DRAWING IS THE PROPERTY OF RIMROCK CORP. AND IS FOR THE CONFIDENTIAL USE OF THE BUYER OR SUPPLIER OF THIS EQUIPMENT.

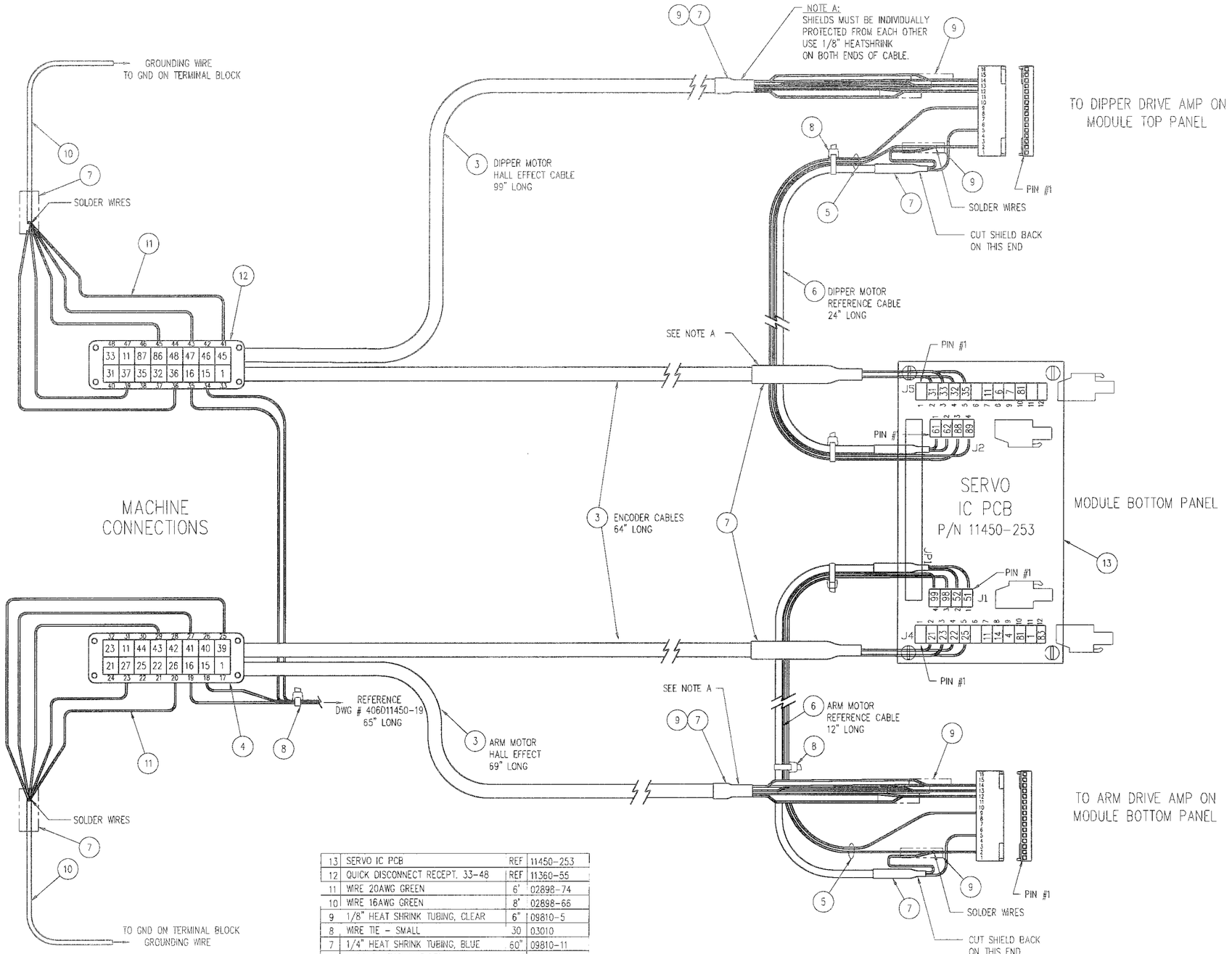

	DIPPER DRIVE AMP CONNECTIONS CABLE					
	EPIC PIN#	WIRE#	DRIVE AMP PIN#	COLOR	FUNCTION	SERVO IC PCB
HALL EFFECT CABLE	46 Ⓑ	87	12	GREEN	HALL 1	–
	46 Ⓑ	87	12	BLACK	HALL 1	–
	45 Ⓒ	86	N/C	DRAIN	SHIELD/GREEN	–
	42	46	13	WHITE	HALL 2	–
	42	46	13	BLACK	HALL 2	–
	41	45	N/C	DRAIN	SHIELD/WHITE	–
	44	48	14	RED	HALL 3	–
	44	48	14	BLACK	HALL 3	–
	43	47	N/C	DRAIN	SHIELD/RED	–
REFERENCE CABLE	–	61	5	RED	REF +	J2-1
	–	62	2	BLACK	REF –	J2-2
ENABLE CABLE	–	88	9	BLUE	ENABLE	J2-3
	–	89	2	BLUE	ENABLE RETURN	J2-4

	DIPPER SERVO IC PCB CONNECTIONS CABLE				
	EPIC PIN#	WIRE #	SERVO IC PCB	COLOR	FUNCTION
ENCODER CABLE	34	15	N/C	BLUE	+5VDC
	35	16	N/C	BLUE	5VDC COMM
	36	36	N/C	DRAIN	SHIELD/RED
	37	32	J5-4	RED	B+
	38	35	J5-5	BLACK	B–
	39	37	N/C	DRAIN	SHIELD/GREEN
	40	31	J5-2	GREEN	A+
	48	33	J5-3	BLACK	A–
REFERENCE CABLE	–	61	J2-1	RED	REF +
	–	62	J2-2	BLACK	REF –
	–	–	J2-2	DRAIN	DRAIN
CABLE CONTROL	–	88	J2-3	BLUE	ENABLE
	–	89	J2-4	BLUE	ENABLE RETURN
	–	6	J5-8	BLUE	CCW LIMIT
	–	7	J5-9	BLUE	CW LIMIT
	–	11	J5-7	BLUE	24V COMMON

	ARM SERVO IC PCB CONNECTIONS CABLE				
	EPIC PIN#	WIRE #	SERVO IC PCB	COLOR	FUNCTION
ENCODER CABLE	18	15	N/C	BLUE	+5VDC
	19	16	N/C	BLUE	5VDC COMM
	20	26	N/C	DRAIN	SHIELD/RED
	21	22	J4-4	RED	B+
	22	25	J4-5	BLACK	B–
	23	27	N/C	DRAIN	SHIELD/GREEN
	24	21	J4-2	GREEN	A+
	32	23	J4-3	BLACK	A–
REFERENCE CABLE	–	51	J1-1	RED	REF +
	–	52	J1-2	BLACK	REF –
	–	–	J1-2	DRAIN	DRAIN
CONTROL CABLE	–	98	J1-3	BLUE	ENABLE
	–	99	J1-4	BLUE	ENABLE RETURN
	–	14	J4-8	BLUE	CCW LIMIT
	–	4	J4-9	BLUE	CW LIMIT
	–	1	J4-11	BLUE	24 VDC
	–	11	J4-7	BLUE	24V COMMON
	–	83	J4-12	BLUE	BRAKE

	ARM DRIVE AMP CONNECTIONS CABLE					
	EPIC PIN#	WIRE#	DRIVE AMP PIN#	COLOR	FUNCTION	SERVO IC PCB
HALL EFFECT CABLE	30	44	12	GREEN	HALL 1	–
	30	44	12	BLACK	HALL 1	–
	29	43	N/C	DRAIN	SHIELD/GREEN	–
	26	40	13	WHITE	HALL 2	–
	26	40	13	BLACK	HALL 2	–
	25	39	N/C	DRAIN	SHIELD/WHITE	–
	28	42	14	RED	HALL 3	–
	28	42	14	BLACK	HALL 3	–
	27	41	N/C	DRAIN	SHIELD/RED	–
REFERENCE CABLE	–	51	5	RED	REF +	J1-1
	–	52	2	BLACK	REF –	J1-2
ENABLE CABLE	–	98	9	BLUE	ENABLE	J1-3
	–	99	2	BLUE	ENABLE RETURN	J1-4

ITEM,	DESCRIPTION	QTY.	PART NUMBER
13	SERVO IC PCB	REF	11450-253
12	QUICK DISCONNECT RECEPT. 33-48	REF	11360-55
11	WIRE 20AWG GREEN	6'	02898-74
10	WIRE 16AWG GREEN	8"	02898-66
9	1/8" HEAT SHRINK TUBING, CLEAR	6"	09810-5
8	WIRE TIE – SMALL	30	03010
7	1/4" HEAT SHRINK TUBING, BLUE	60"	09810-11
6	2 CONDUCTOR SHIELDED	168"	02915-22
5	WIRE 20AWG BLUE	386"	02898-49
4	QUICK DISCONNECT RECEPT. 17-32	REF	11360-54
3	CABLE, 3-TWISTED PAIR-SHIELDED	296"	02915-15

4. DEBURR
3. SURFACE FINISH 125
2. ALL THREADS CLASS 2A OR 2B
1. PARTS TO CONFORM TO RIMROCK CORP. ENGR. & MFG. STANDARDS

NOTES (UNLESS OTHERWISE SPECIFIED)

ER	DATE	REMARKS	LET	DR	CK
447	12.11 96	UPDATED OVERTRAVELS ON DIPPER AND ARM	D	MAH	
154	10.10 96	ADDED WIRE NUMBER 81 TO SERVO IC PCB	C	AR	
164	5.29 96	CHANGED 405 MODULE I/O RACKS 2 & 3 TO A SERVO IC PCB	C	AR	
191	5.16 96	CORRECTED WIRE NUMBERS FOR THE DIPPER DRIVE CARD HALL EFFECT CABLE.	B	AR	
191	11/16 95	CHANGED ENABLE CABLE WIRE NUMBERS	A	AR	

REVISIONS

MAT'L: SEE ABOVE

RIMROCK®
RIMROCK CORPORATION
1701 RIMROCK ROAD
P.O. BOX 19067
COLUMBUS, OHIO 43219
PHONE 614-471-5924 TELEX 245-401 FAX 614-471-9863
® A Registered Trademark of Rimrock Corporation, Columbus, Ohio U.S.A.

TOLERANCES UNLESS OTHERWISE SPECIFIED
2-DIGIT DECIMALS= .010 FRACTIONS= ± 1/64
3-DIGIT DECIMALS= .005 ANGLES= ± 1/2
4-DIGIT DECIMALS= .0005

THIS DRAWING IS THE PROPERTY OF RIMROCK CORP. AND IS FOR THE CONFIDENTIAL USE OF THE BUYER OR SUPPLIER OF THIS EQUIPMENT

DR AOR DATE 8.15.95 SCALE NONE PIC
CK DATE ER 191 SHEET 1 OF 1

DRAWING NO. 406D11750 REV D

DRAWING NAME WIRING LAYOUT FOR SDL CONTROL CABLE

FOR TRIANGLE CONTROLS

P/N 11750

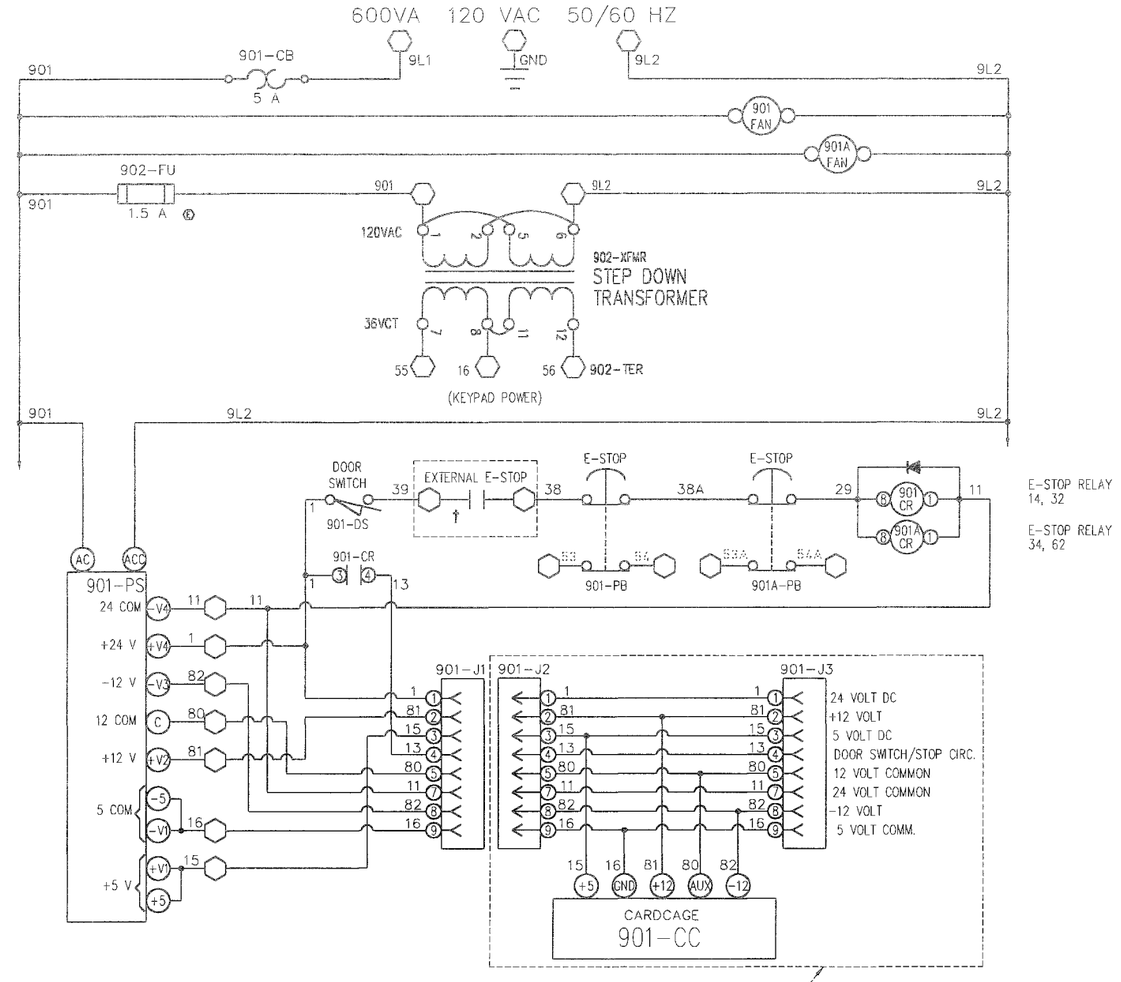

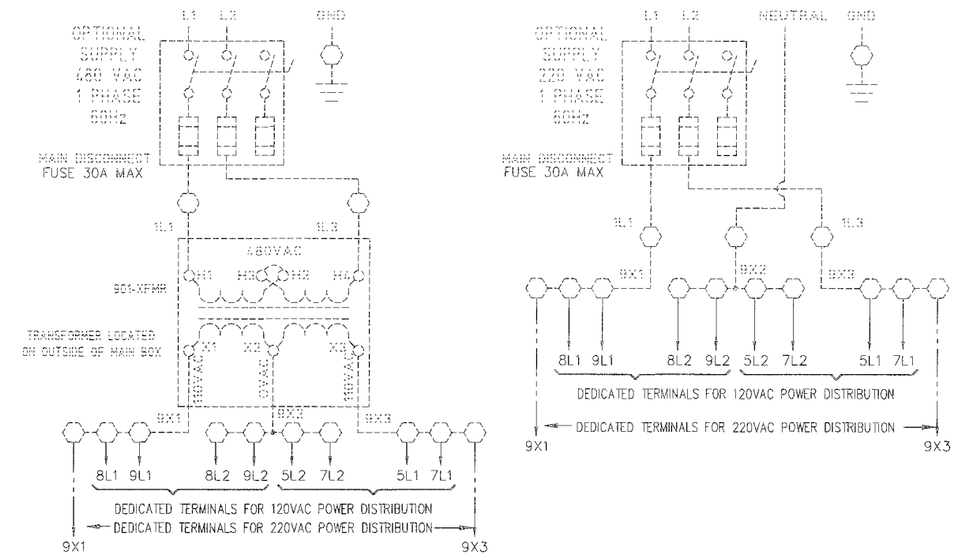

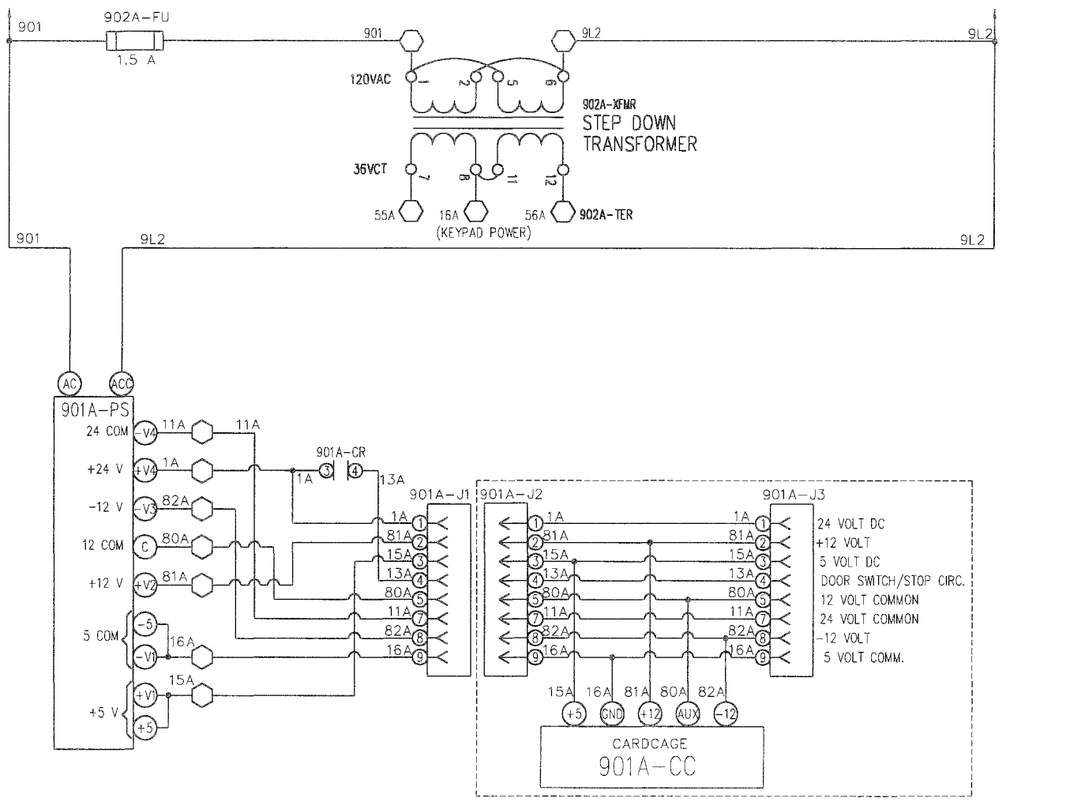

SIMPLIFIED POWER & INTERLOCKS CONNECTION DIAGRAM

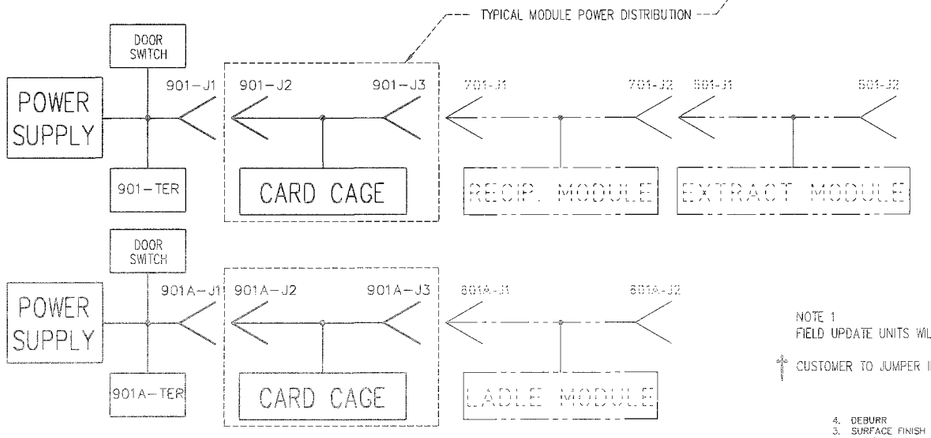

901-CR 5 6 CELL E-STOP CHAIN IF USED

901A-CR 5 6 CELL E-STOP CHAIN IF USED

NOTE 1
FIELD UPDATE UNITS WILL HAVE MORE CONNECTORS THAN SHOWN.

† CUSTOMER TO JUMPER IF NOT USING EXTERNAL E-STOP PUSH BUTTON.

4. DEBURR
3. SURFACE FINISH 125
2. ALL THREADS CLASS 2A OR 2B
1. PARTS TO CONFORM TO RIMROCK CORP. ENGR. & MFG. STANDARDS

NOTES (UNLESS OTHERWISE SPECIFIED)

ER	DATE	REMARKS	LET	DR	CK
0098	2.16 00	CHANGED BALLON #'S FOR HIGH VOLTAGE OPTION TO RESEMBLE BOM, SHT 3	G	JPS	
328	4.27 99	DELETED CARD KIT FROM BOM FOR LADLE, CREATED NEW BOMS FOR LADLE COMBOS	F	DS	

ER	DATE	REMARKS	LET	DR	CK
0033	2.08 99	UNPHANTOMED TRANSFORMER,ADDED FUSE CHANGED OPT. STOP CKT TO #53 AND #54	E	JPS	
868	10.31 98	ADDED 63 , 64 TO PG 2	D	MF	
672	9-6 98	CORRECTED BALLOON NUMBERS ON SHEETS 2 AND 3	C	MK	
615	8.24 98	SEE PAGE 3 FOR CHANGES	B	SME	
513	6-20 98	CHANGED TERMINAL STRIP ON SHEET 2 AND 3	A	MK	

REVISIONS

MAT'L: SEE B.O.M.

TOLERANCES UNLESS OTHERWISE SPECIFIED
2-DIGIT DECIMALS= ±.010 FRACTIONS= ±1/64
3-DIGIT DECIMALS= ±.005 ANGLES= ±1/2
4-DIGIT DECIMALS= ±.0005

RIMROCK CORPORATION
1700 RIMROCK ROAD
COLUMBUS, OHIO 43219
PHONE:614-471-5626 FAX:614-471-1973
® A Registered Trademark of Rimrock Corporation, Columbus, Ohio U.S.A.

DR MAT DATE 4.22.98 SCALE NONE PIC
CK DATE ER 294 SHEET 1 OF 3
DRAWING NO. 140D11850-02 REV G
DRAWING NAME MAIN PANEL – SCHEMATIC
FOR 405 COMBO TRIANGLE SYSTEM

THIS DRAWING IS THE PROPERTY OF RIMROCK CORP. AND IS FOR THE CONFIDENTIAL USE OF THE BUYER OR SUPPLIER OF THIS EQUIPMENT.

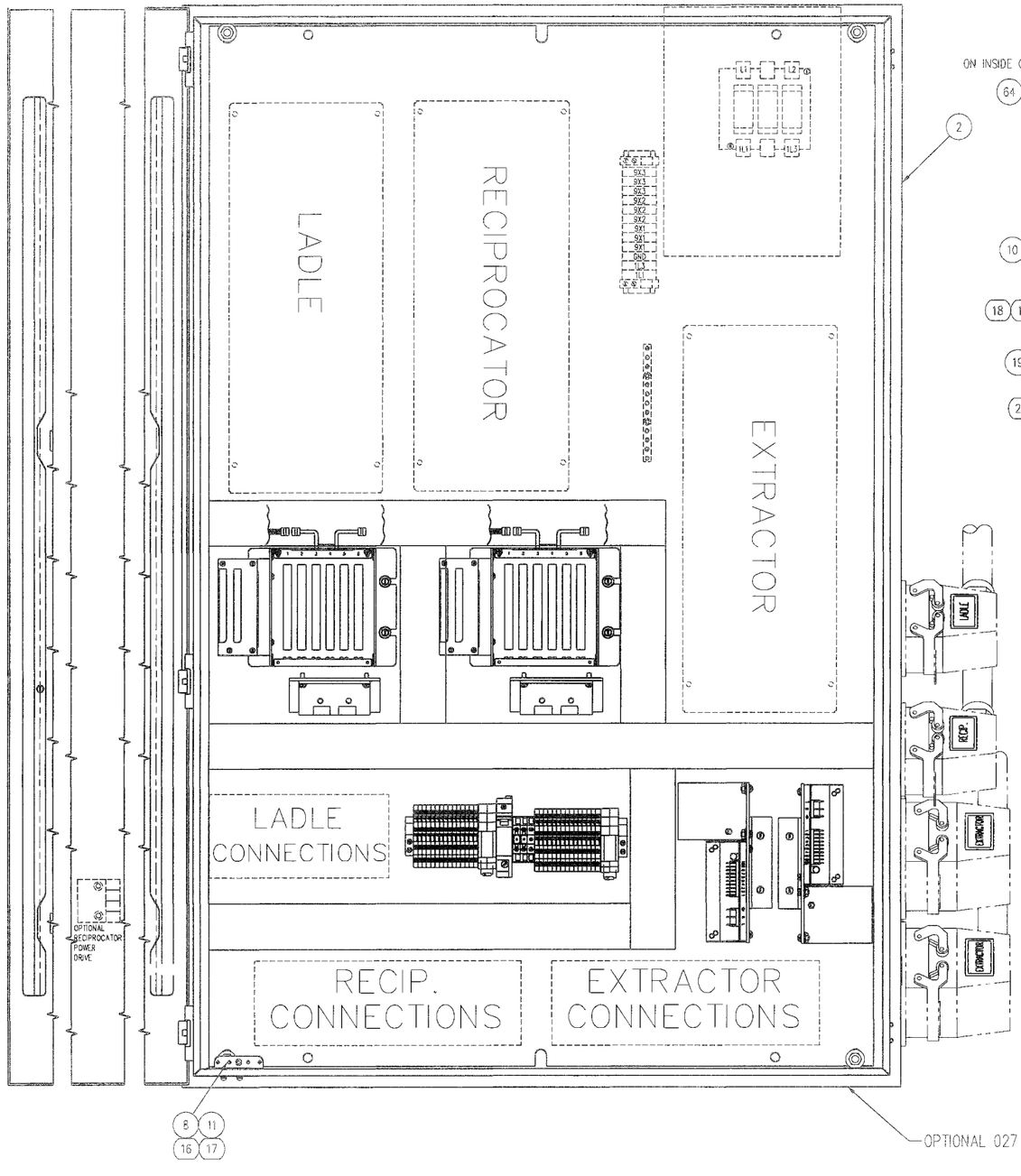

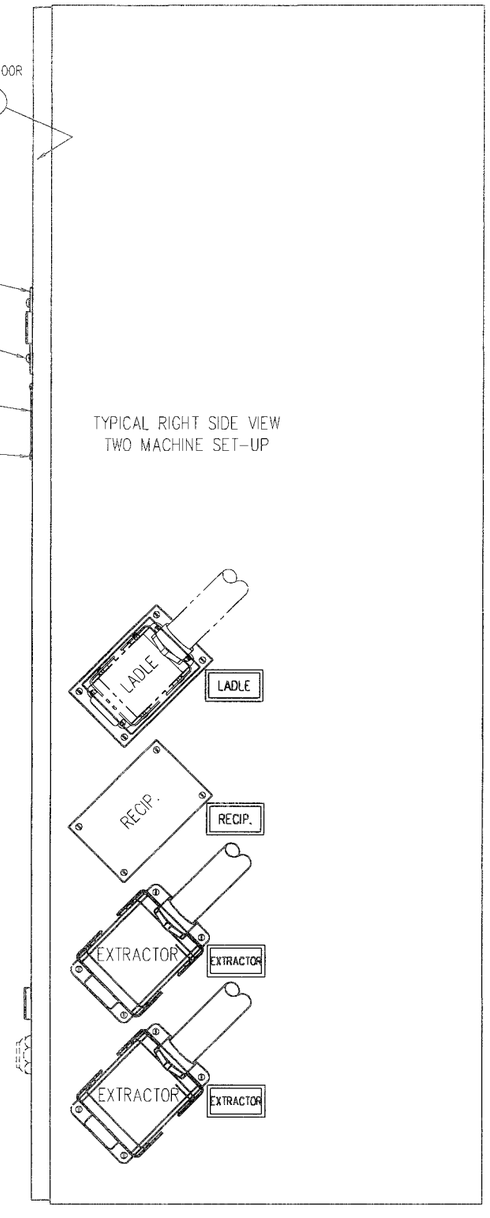

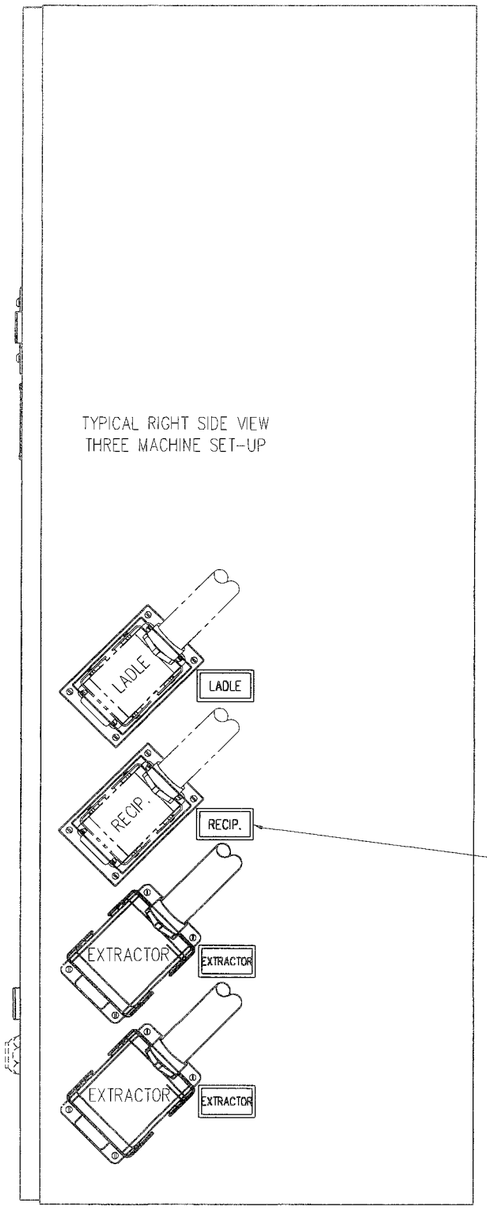

OPTIONAL 027 TRANSFORMER MOUNTS IN BOTTOM OF ENCLOSURE

P/N 11850-02

* NOTE: 405 POWER SUPPLY CONNECTORS AND CARD CAGE CONNECTORS ARE COLORED IN RED

NOTES (UNLESS OTHERWISE SPECIFIED)
1. PARTS TO CONFORM TO RIMROCK CORP. ENGR. & MFG. STANDARDS
2. ALL THREADS CLASS 2A OR 2B
3. SURFACE FINISH 125
4. DEBURR

ER	DATE	REVISIONS	LET	DR	CK
0098	2.16 00	CHANGED BALLON #'S FOR HIGH VOLTAGE OPTION TO RESEMBLE BOM, SHT 3	G	JPS	
328	4.27 99	DELETED CARD KIT FROM BOM FOR LADLE, CREATED NEW BOMS FOR LADLE COMBOS	F	DS	
0033	2.08 99	UNPHANTOMED TRANSFORMER, ADDED FUSE CHANGED OPT. STOP CKT TO #53 AND #54.	E	JPS	
868	10.31 98	ADDED ITEMS 63 & 64	D	MK	
672	6-8 98	CORRECTED BALLOON NUMBERS	C	MK	
615	8.24 98	ADDED 2 TERMINALS TO STRIPS	B	SMB	
513	6-20 98	CHANGED TERMINAL STRIP AND ADDED TERMINALS TO POWER STRIP	A	MK	

MAT'L: SEE B.O.M.

RIMROCK CORPORATION
1700 RIMROCK ROAD
COLUMBUS, OHIO 43219
PHONE: 614-471-5028 FAX: 614-471-1073
* A Registered Trademark of Rimrock Corporation, Columbus, Ohio U.S.A.

TOLERANCES UNLESS OTHERWISE SPECIFIED
2-DIGIT DECIMALS= ±.010 FRACTIONS= ± 1/64
3-DIGIT DECIMALS= ±.005 ANGLES= ±1/2
4-DIGIT DECIMALS= ±.0005

DR MAK DATE 4.22.98 SCALE 1/3 PIC
CK DATE ER 294 SHEET 2 OF 3
DRAWING NO. 140D11850-02 REV G
DRAWING NAME MAIN BOX ASSEMBLY
FOR 405 COMBO TRIANGLE SYSTEM

THIS DRAWING IS THE PROPERTY OF RIMROCK CORP. AND IS FOR THE CONFIDENTIAL USE OF THE BUYER OR SUPPLIER OF THIS EQUIPMENT.

QTY	DATE	REMARKS	QTY	DATE	REMARKS	CK	CK	QA	ECN
			0035	2.08	UNPHANTOMED TRANSFORMER, ADDED FUSE				
			99		CHANGED OPT. STOP CKT. TO #53 AND #54				
			865	10.31	ADDED ITEMS 63 & 64 TO PO 2				
			98						
			672	9-8	CORRECTED BALLOON NUMBERS				
			98						
		CHANGED BALLOON #'S FOR HIGH VOLTAGE	615	8.24	ADDED 2 D-STACK TERMINALS				
0098	2.16	OPTION TO RECOGNIZE BOX, SHT 3	98						
		DELETED CARD KIT FROM BOM FOR LABEL	513	6-20	CHANGED TERMINAL STRIP AND ADDED				
328	4.27	DELETED NEW BOMS FOR LABEL CHANGES	98		TERMINALS TO POWER STRIP				
99									
00	2.16	OPTION TO RECOGNIZE BOX, SHT 3							

REVISIONS							
LET	QA	QC	QR	REMARKS	DATE	BY	LET
F	QS			DELETED CARD KIT FROM BOM FOR LABEL	4.27		F
				DELETED NEW BOMS FOR LABEL CHANGES	99		
F	JPS			CHANGED BALLOON #'S FOR HIGH VOLTAGE	0098	2.16	
				OPTION TO RECOGNIZE BOX, SHT 3	00		

NOTES (UNLESS OTHERWISE SPECIFIED)
1. PARTS TO CONFORM TO RAMPOCK CORP. ENGR. & MFG. STANDARDS
2. ALL THREADS CLASS 2A OR 2B
3. SURFACE FINISH 125
4. DEBURR

**NOTE: 405 CARD CAGE AND POWER SUPPLY CONNECTORS ARE COLORED IN RED

*NOTE: 40 SERIES BALLOON NUMBERS REPRESENT HIGH VOLTAGE OPTION

CONNECT INCOMING POWER
(IF DISCONNECT OPTION NOT USED)
SEE SHEET 1

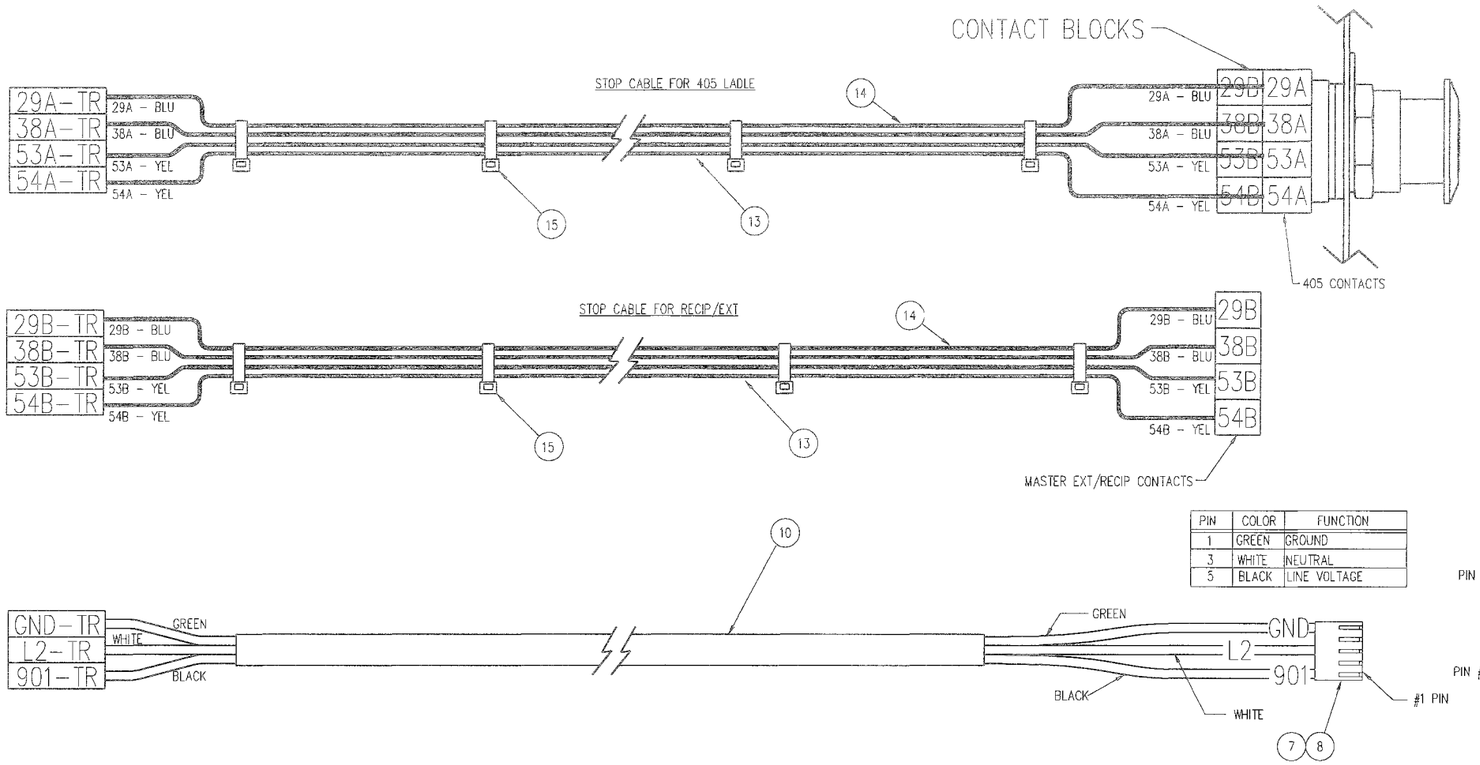

PIN	COLOR	FUNCTION
1	GREEN	GROUND
3	WHITE	NEUTRAL
5	BLACK	LINE VOLTAGE

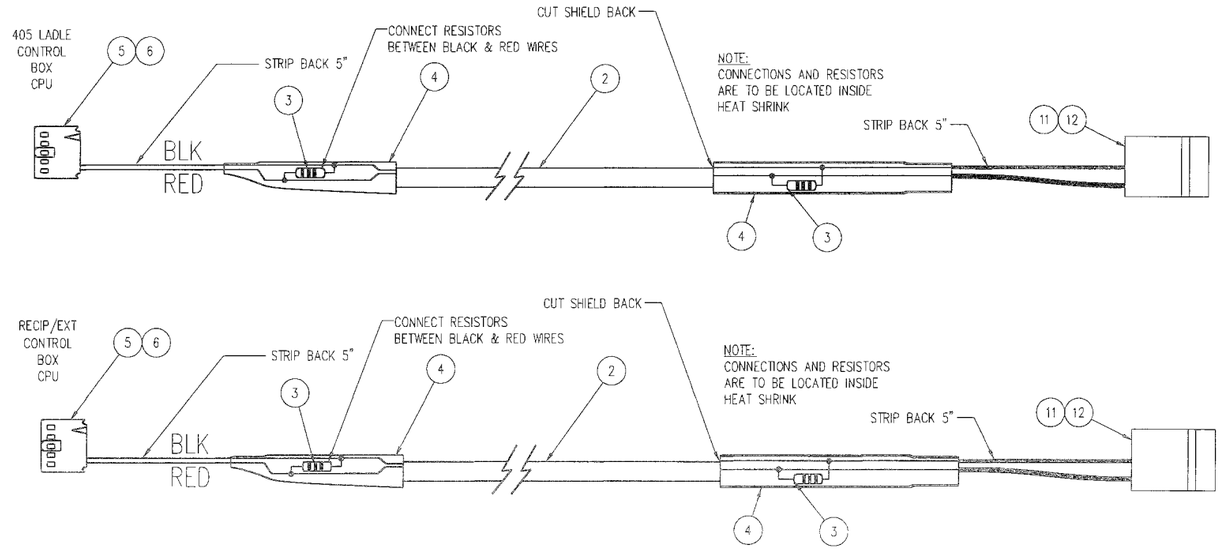

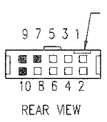

PIN	COLOR	FUNCTION
7	BLACK	TRANSMIT/RECEIVE –
9	RED	TRANSMIT/RECEIVE +
10	SHIELD	

REAR VIEW

FUNCTION	COLOR	PIN
TRANSMIT / RECEIVE –	BLACK	3
TRANSMIT / RECEIVE +	RED	2



DASH NO & LENGTH	QTY	DESCRIPTION	CUT	PART NO.
–575 75 FEET	2	2 WIRE CABLE	75'	02915–22
	4	WIRE 16 BLUE	75'	02898–65
	4	WIRE 14 YELLOW	75'	02898–4
	2	16–3 SO	75'	02826
–570 70 FEET	2	2 WIRE CABLE	70'	02915–22
	4	WIRE 16 BLUE	70'	02898–65
	4	WIRE 14 YELLOW	70'	02898–4
	2	16–3 SO	70'	02826
–565 65 FEET	2	2 WIRE CABLE	65'	02915–22
	4	WIRE 16 BLUE	65'	02898–65
	4	WIRE 14 YELLOW	65'	02898–4
	2	16–3 SO	65'	02826
–560 60 FEET	2	2 WIRE CABLE	60'	02915–22
	4	WIRE 16 BLUE	60'	02898–65
	4	WIRE 14 YELLOW	60'	02898–4
	2	16–3 SO	60'	02826
–555 55 FEET	2	2 WIRE CABLE	55'	02915–22
	4	WIRE 16 BLUE	55'	02898–65
	4	WIRE 14 YELLOW	55'	02898–4
	2	16–3 SO	55'	02826
–550 50 FEET	2	2 WIRE CABLE	50'	02915–22
	4	WIRE 16 BLUE	50'	02898–65
	4	WIRE 14 YELLOW	50'	02898–4
	2	16–3 SO	50'	02826
–545 45 FEET	2	2 WIRE CABLE	45'	02915–22
	4	WIRE 16 BLUE	45'	02898–65
	4	WIRE 14 YELLOW	45'	02898–4
	2	16–3 SO	45'	02826
–540 40 FEET	2	2 WIRE CABLE	40'	02915–22
	4	WIRE 16 BLUE	40'	02898–65
	4	WIRE 14 YELLOW	40'	02898–4
	2	16–3 SO	40'	02826
–535 35 FEET	2	2 WIRE CABLE	35'	02915–22
	4	WIRE 16 BLUE	35'	02898–65
	4	WIRE 14 YELLOW	35'	02898–4
	2	16–3 SO	35'	02826
–533 33 FEET	2	2 WIRE CABLE	33'	02915–22
	4	WIRE 16 BLUE	33'	02898–65
	4	WIRE 14 YELLOW	33'	02898–4
	2	16–3 SO	33'	02826

P/N 16803–5XX

4. DEBURR
3. SURFACE FINISH 125
2. ALL THREADS CLASS 2A OR 2B
1. PARTS TO CONFORM TO RIMROCK CORP. ENGR. & MFG. STANDARDS

NOTES (UNLESS OTHERWISE SPECIFIED)

ER	DATE	REMARKS	LET	DR	CK

REVISIONS

MAT'L: SEE B.O.M.

DR JPS | DATE 3.19.99 | SCALE NTS | PIC

CK | DATE | EN 613 | SHEET | OF

RIMROCK CORPORATION
1700 RIMROCK ROAD
COLUMBUS, OHIO 43219
PHONE: 614–471–5928 FAX: 614–471–1073
"A Registered Trademark of Rimrock Corporation, Columbus, Ohio U.S.A."

DRAWING NO. 140D16803–500 | REV

DRAWING NAME VIDEO COMBO CABLE ASSEMBLY

FOR CDI TOUCH SCREEN

TOLERANCES UNLESS OTHERWISE SPECIFIED
2–DIGIT DECIMALS= ±.010 FRACTIONS= ±1/64
3–DIGIT DECIMALS= ±.005 ANGLES= ±1/2
4–DIGIT DECIMALS= ±.0005

THIS DRAWING IS THE PROPERTY OF RIMROCK CORP. AND IS FOR THE CONFIDENTIAL USE OF THE BUYER OR SUPPLIER OF THIS EQUIPMENT

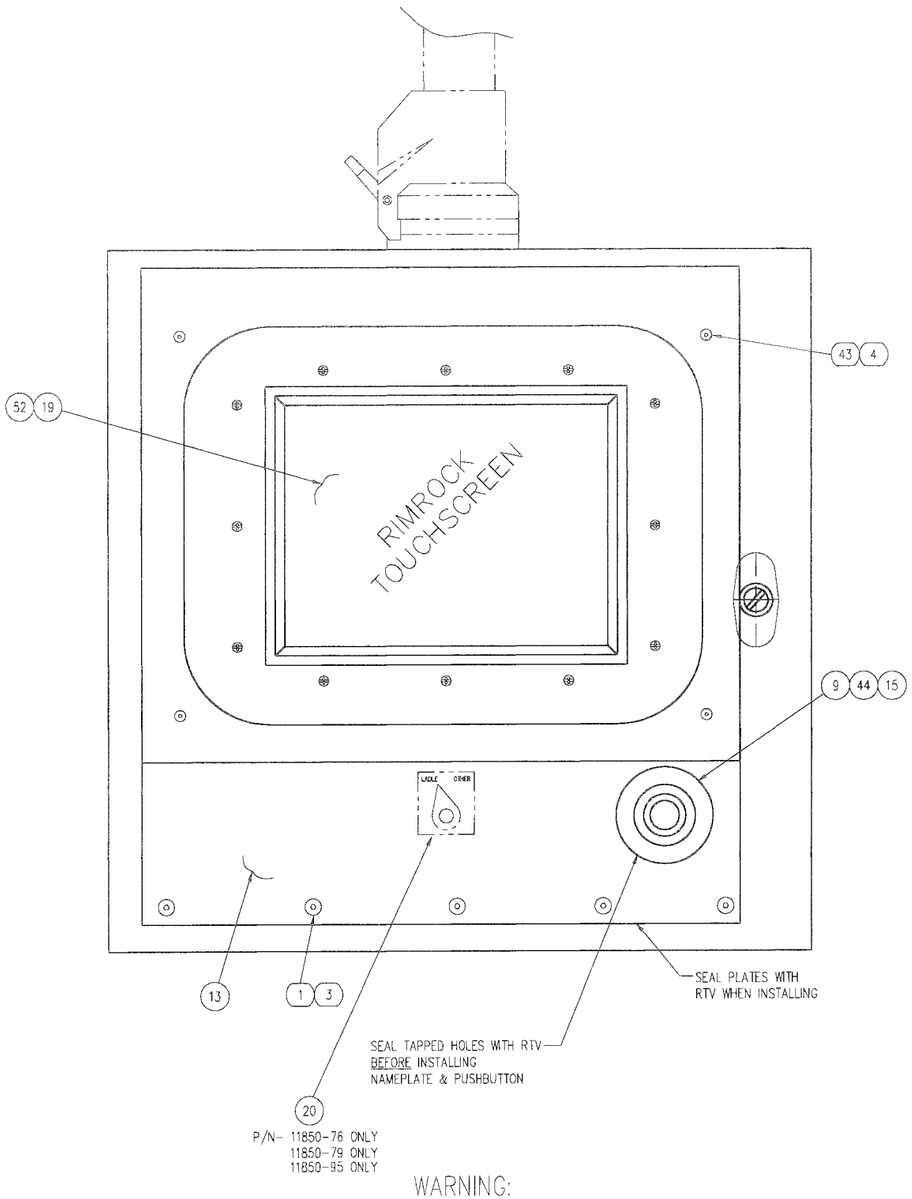

P/N- 11850-76 ONLY
11850-79 ONLY
11850-95 ONLY

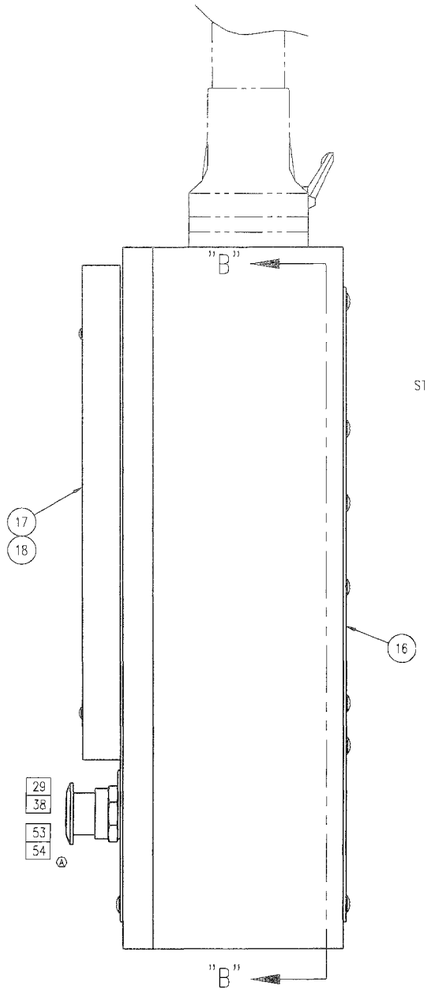

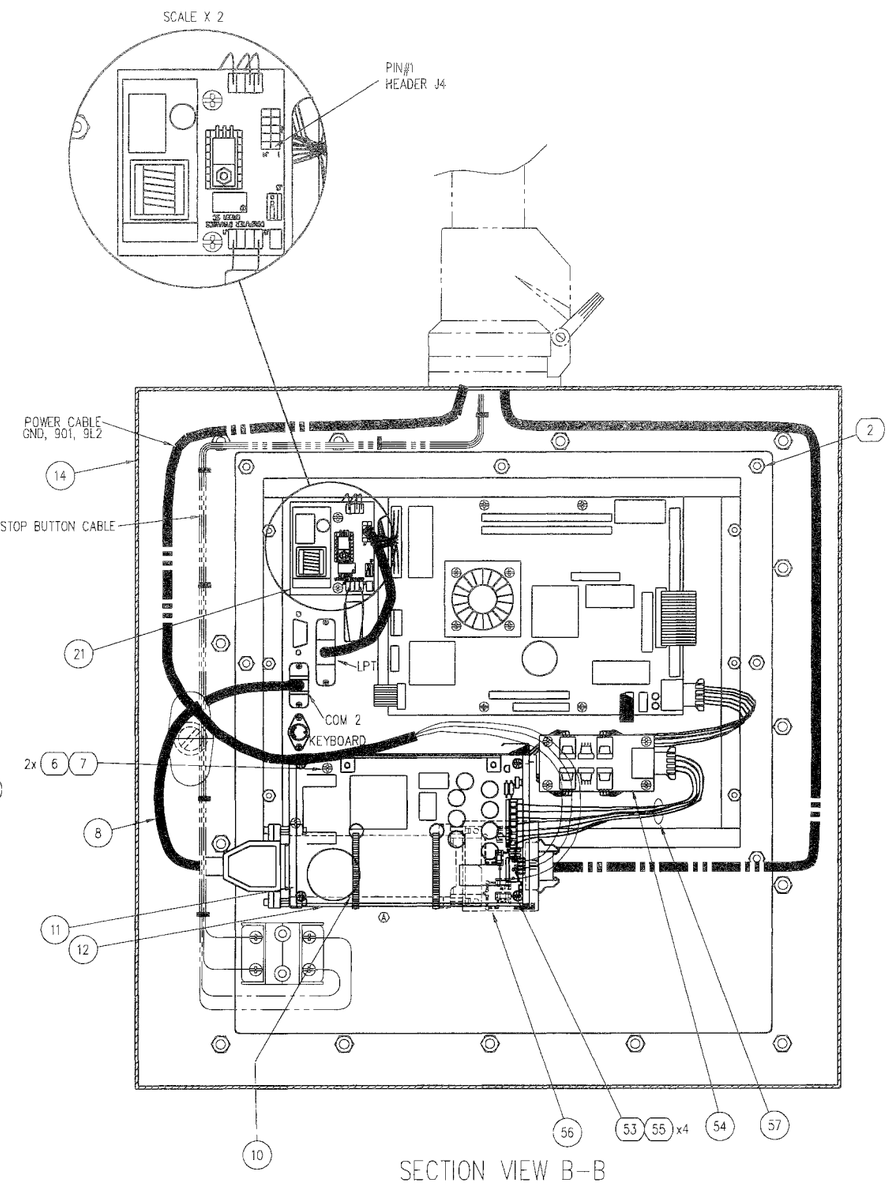

SECTION VIEW B-B

WARNING:
USE ONLY THE CABLE PROVIDED, P/N 16803-4XX OR 16803-5XX.
FAILURE TO DO SO MAY CAUSE PERMANENT DAMAGE.

P/N - 11850-75 CDI (GUIDED ACOUSTICAL WAVE)
11850-76 CDI (GUIDED ACOUSTICAL WAVE WITH A/B SELECTOR SWITCH)
11850-78 CDI (CAPACITIVE DISCHARGE, MICROTOUCH)
11850-79 CDI (CAPACITIVE DISCHARGE, MICROTOUCH, WITH A/B SELECTOR SWITCH)
11850-94 CDI (CAPACITIVE DISCHARGE, TEKTOUCH)
11850-95 CDI (CAPACITIVE DISCHARGE, TEKTOUCH, WITH A/B SELECTOR SWITCH)

4. DEBURR
3. SURFACE FINISH 125
2. ALL THREADS CLASS 2A OR 2B
1. PARTS TO CONFORM TO RIMROCK CORP. ENGR. & MFG. STANDARDS

NOTES (UNLESS OTHERWISE SPECIFIED)

BY	DATE	REMARKS	LET	DR	CK
0442	6.11 98	ADDED P/N'S 11850-78 AND 11850-79 TO DRAWING	B	JPS	
178	3.17 98	UPDATED POWER SUPPLY MOUNT AND OPTIONAL STOP CIRCUIT NUMBERS	A	JPS	

REVISIONS

MAT'L: SEE B.O.M.

RIMROCK CORPORATION
1700 RIMROCK ROAD
COLUMBUS, OHIO 43219

PHONE: 614-471-5926 FAX: 614-471-1073
® A Registered Trademark of Rimrock Corporation, Columbus, Ohio U.S.A.

TOLERANCES UNLESS OTHERWISE SPECIFIED
2-DIGIT DECIMALS= ±.010 FRACTIONS= ±1/64
3-DIGIT DECIMALS= ±.005 ANGLES= ±1/2
4-DIGIT DECIMALS= ±.0005

DR	SMD
DATE	11.2.98
SCALE	1/2
PIC	
CK	
DATE	
ER	879
SHEET	OF
DRAWING NO.	140D11850-94
REV	B
DRAWING NAME	TOUCH SCREEN ASSEMBLY
	TYPE II
FOR	TRIANGLE SYSTEMS

THIS DRAWING IS THE PROPERTY OF RIMROCK CORP. AND IS FOR THE CONFIDENTIAL USE OF THE BUYER OR SUPPLIER OF THIS EQUIPMENT.

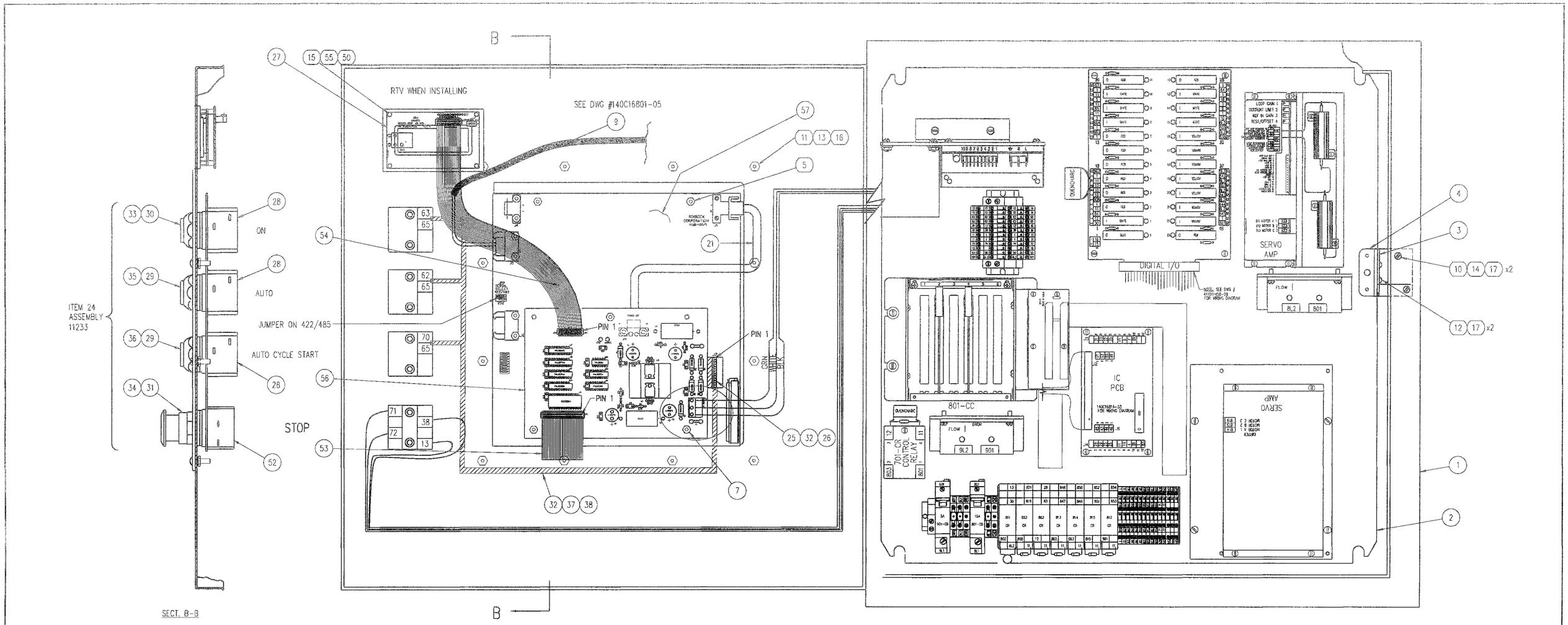

PUSH BUTTON WIRE ROUTING

WIRE #	FROM	TERM P/N	TO	TERM P/N
62	PIN 2	11042-103	AUTO P.B.	11215-03
63	PIN 3	11042-103	MANUAL P.B.	11215-03
65	PIN 5	11042-103	MANUAL P.B.	11215-03
70	PIN 10	11042-103	CYCLE START	11215-03
65	MANUAL P.B.	11215-03	AUTO P.B.	11215-03
65	AUTO P.B.	11215-03	CYCLE START P.B.	11215-03

ALL WIRES TO BE BLUE #20 AWG. (P/N 02898-49)

CONNECTOR HOUSING PIN-OUT

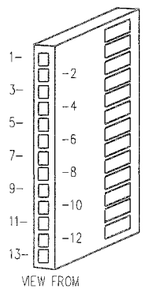

PIN #	WIRE #
2	62
3	63
5	65
10	70

HOUSING P/N 11042-013
PINS (GOLD) P/N 11042-103

CAUTION: TO INSURE PROPER FUNCTION, PIN #1 ON CONNECTOR MUST ALIGN WITH PIN #1 ON THE HEADER.

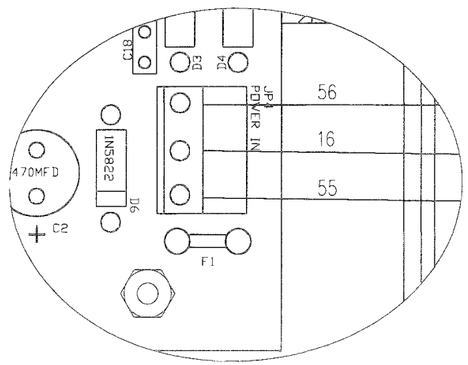

KEYPAD DIP SWITCH SETTINGS



NOTE: SDB SOFTWARE VERSION 3.22 OR HIGHER.

4. DEBURR
3. SURFACE FINISH 125
2. ALL THREADS CLASS 2A OR 2B
1. PARTS TO CONFORM TO RIMROCK CORP. ENGR. & MFG. STANDARDS

NOTES (UNLESS OTHERWISE SPECIFIED)

ER	DATE	REMARKS	LET	DR	CK	ER	DATE	REMARKS	LET	DR	CK
REVISIONS						REVISIONS					

MAT'L: SEE B.O.M.

RIMROCK CORPORATION
1700 RIMROCK ROAD
P.O. BOX 19857
COLUMBUS, OHIO 43219
PHONE: 614-471-5926 TELEX: 245-401 FAX: 614-471-0033
A Registered Trademark of Rimrock Corporation, Columbus, Ohio U.S.A.

TOLERANCES UNLESS OTHERWISE SPECIFIED
2-DIGIT DECIMALS= ±.010 FRACTIONS= ± 1/64
3-DIGIT DECIMALS= ±.005 ANGLES= ±1/2
4-DIGIT DECIMALS= ±.0005

DR	DATE	SCALE	PIC
JPS	11.25.98		
CK	DATE	ER 1001	SHEET OF

DRAWING NO. 406D09935-20 REV

DRAWING NAME ASSEMBLY-CONTROL BOX

FOR 405 SERVO LADLE IN 24X24 BOX

THIS DRAWING IS THE PROPERTY OF RIMROCK CORP. AND IS FOR THE CONFIDENTIAL USE OF THE BUYER OR SUPPLIER OF THIS EQUIPMENT

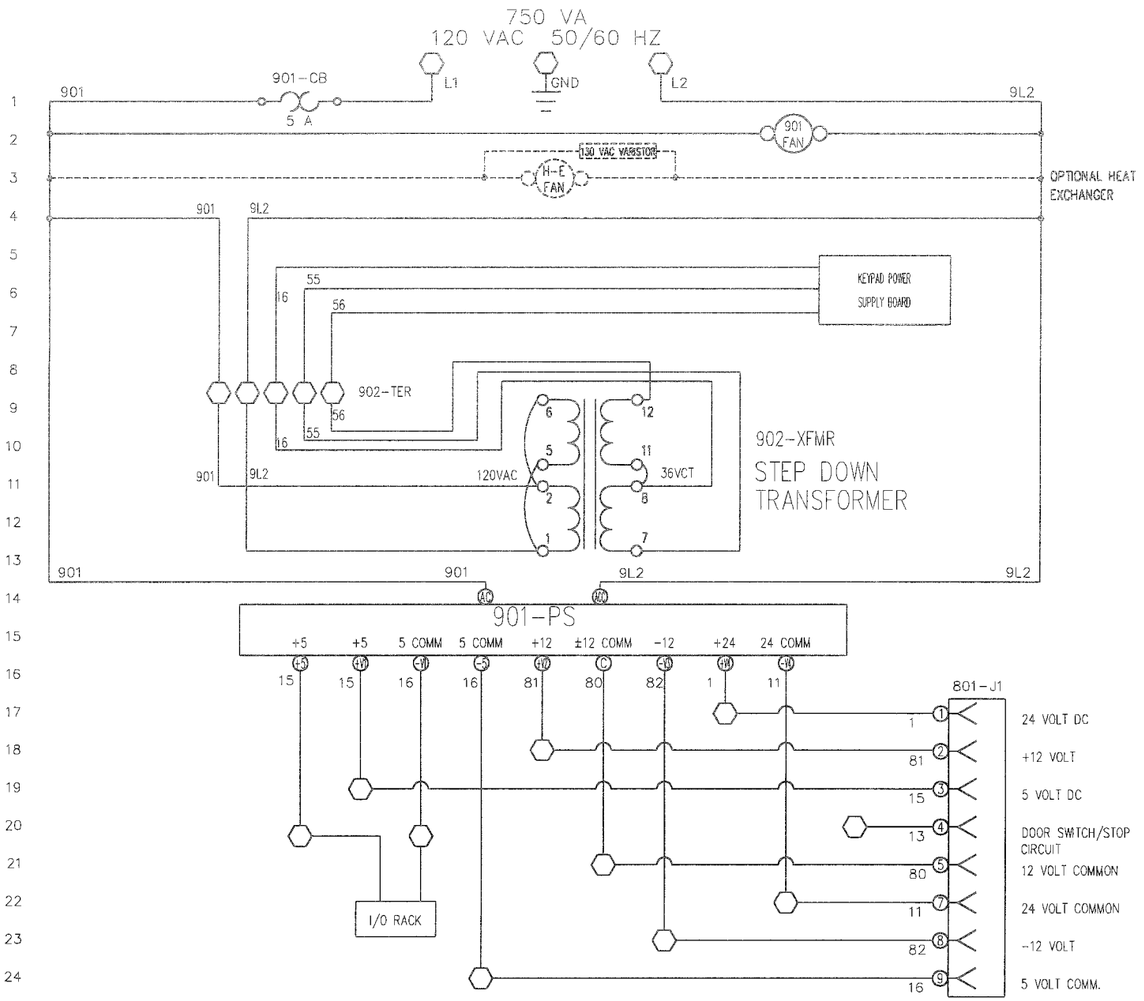

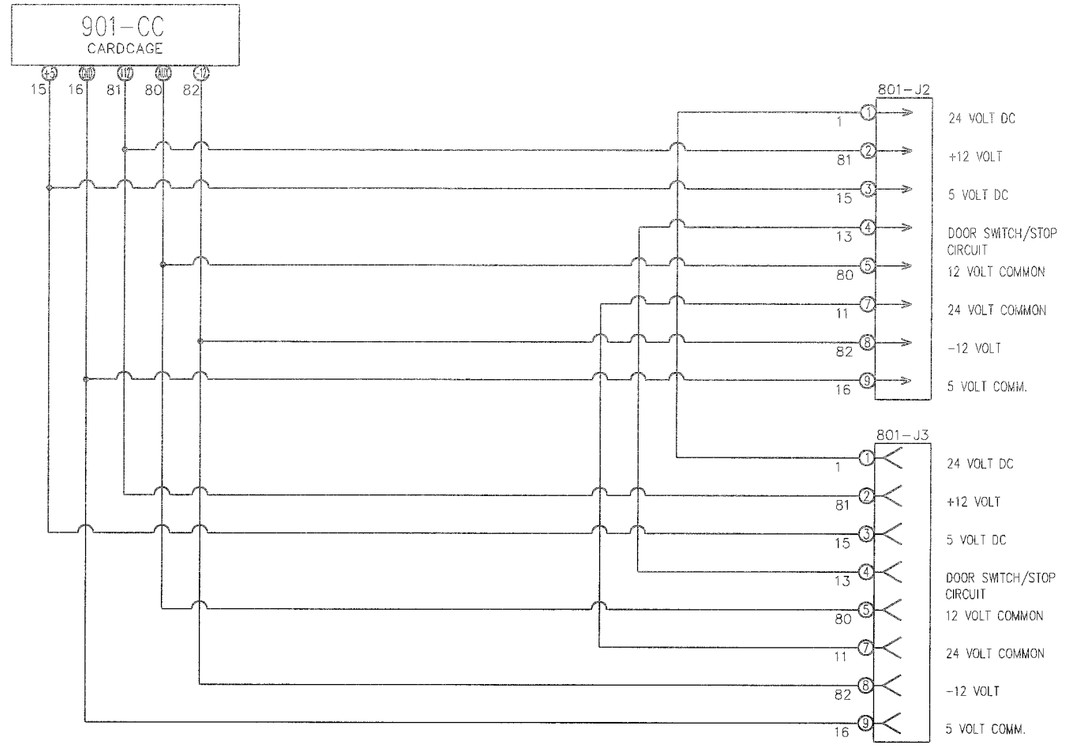

CARD	CARD DESCRIPTION	DWG NUMBER
CPU-2	CENTRAL PROCSSOR UNIT	140B11440-05
DBO-1	DIGITAL BREAKOUT I/O	140B11440-11
SERVO	SERVO CARD	140B11442-11

CABLE CONNECTIONS

RIMROCK MACHINES	REMOTE PB 140C11084-06	405 SERVO IC PCB JP1 140C16814-03	405 DIGITAL I/O #1 306B11083-04	405 KEYPAD 140C16801-133	POWER
405	DBO-1 J1	SERVO J1	DBO-1 J2	CPU-2 J8	801-J1 TO 801-J2

CARDS IN CARD CAGE

RIMROCK MACHINES	901 - CAGE	902 - CAGE	903 - CAGE	904 - CAGE	905 - CAGE	906 - CAGE
405	DBO-1	CPU-2	–	SERVO	–	–

4. DEBURR
3. SURFACE FINISH 125
2. ALL THREADS CLASS 2A OR 2B
1. PARTS TO CONFORM TO RIMROCK CORP. ENGR. & MFG. STANDARDS

NOTES (UNLESS OTHERWISE SPECIFIED)

ER	DATE	REMARKS	DES	DR	CK

REVISIONS

ER	DATE	REMARKS	DES	DR	CK

REVISIONS

MAT'L: SEE B.O.M.

RIMROCK

RIMROCK CORPORATION
1700 RIMROCK ROAD
COLUMBUS, OHIO 43219

PHONE:614-471-5026 FAX:614-471-1073

® A Registered Trademark of Rimrock Corporation, Columbus, Ohio U.S.A.

TOLERANCES UNLESS OTHERWISE SPECIFIED
2-DIGIT DECIMALS= ±.010 FRACTIONS= ±1/64
3-DIGIT DECIMALS= ±.005 ANGLES= ±1/2
4-DIGIT DECIMALS= ±.0005

DR JPS DATE 11.19.98 SCALE NONE PIC
CK DATE ER SHEET 1 OF 4

DRAWING NO. 406D09934-21 REV

DRAWING NAME MAIN PANEL - SCHEMATIC

FOR 405 SERVO LADLE IN 24X24 BOX

THIS DRAWING IS THE PROPERTY OF RIMROCK CORP. AND IS FOR THE CONFIDENTIAL USE OF THE BUYER OR SUPPLIER OF THIS EQUIPMENT

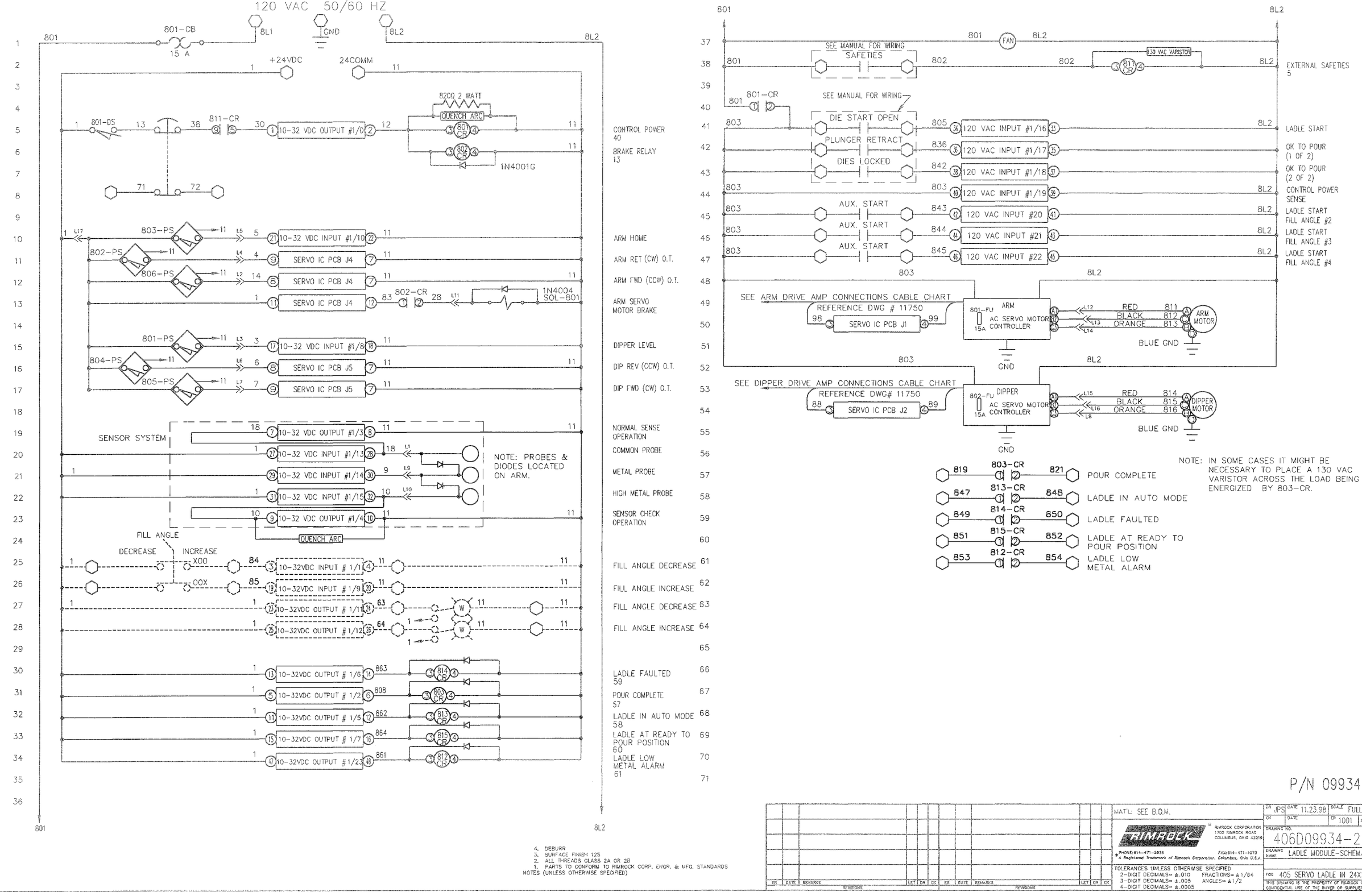

P/N 09934-21

NOTES (UNLESS OTHERWISE SPECIFIED)
1. PARTS TO CONFORM TO RIMROCK CORP. ENGR. & MFG. STANDARDS
2. ALL THREADS CLASS 2A OR 2B
3. SURFACE FINISH 125
4. DEBURR

REVISIONS															
ER	DATE	REMARKS	LET	DR	CK	ER	DATE	REMARKS	LET	DR	CK				

MAT'L: SEE B.O.M.

RIMROCK CORPORATION
1700 RIMROCK ROAD
COLUMBUS, OHIO 43219
PHONE: 614-471-5926 FAX: 614-471-1073
RIMROCK® A Registered Trademark of Rimrock Corporation, Columbus, Ohio U.S.A.

TOLERANCES UNLESS OTHERWISE SPECIFIED
2-DIGIT DECIMALS= ±.010 FRACTIONS= ±1/64
3-DIGIT DECIMALS= ±.005 ANGLES= ±1/2
4-DIGIT DECIMALS= ±.0005

DR	JPS	DATE	11.23.98	SCALE	FULL
CK		DATE		ER	1001

SHEET 2 OF 4

DRAWING NO. 406D09934-21 REV

DRAWING NAME LADLE MODULE-SCHEMATIC

FOR 405 SERVO LADLE IN 24X24 BOX

THIS DRAWING IS THE PROPERTY OF RIMROCK CORP. AND IS FOR THE CONFIDENTIAL USE OF THE BUYER OR SUPPLIER OF THIS EQUIPMENT.

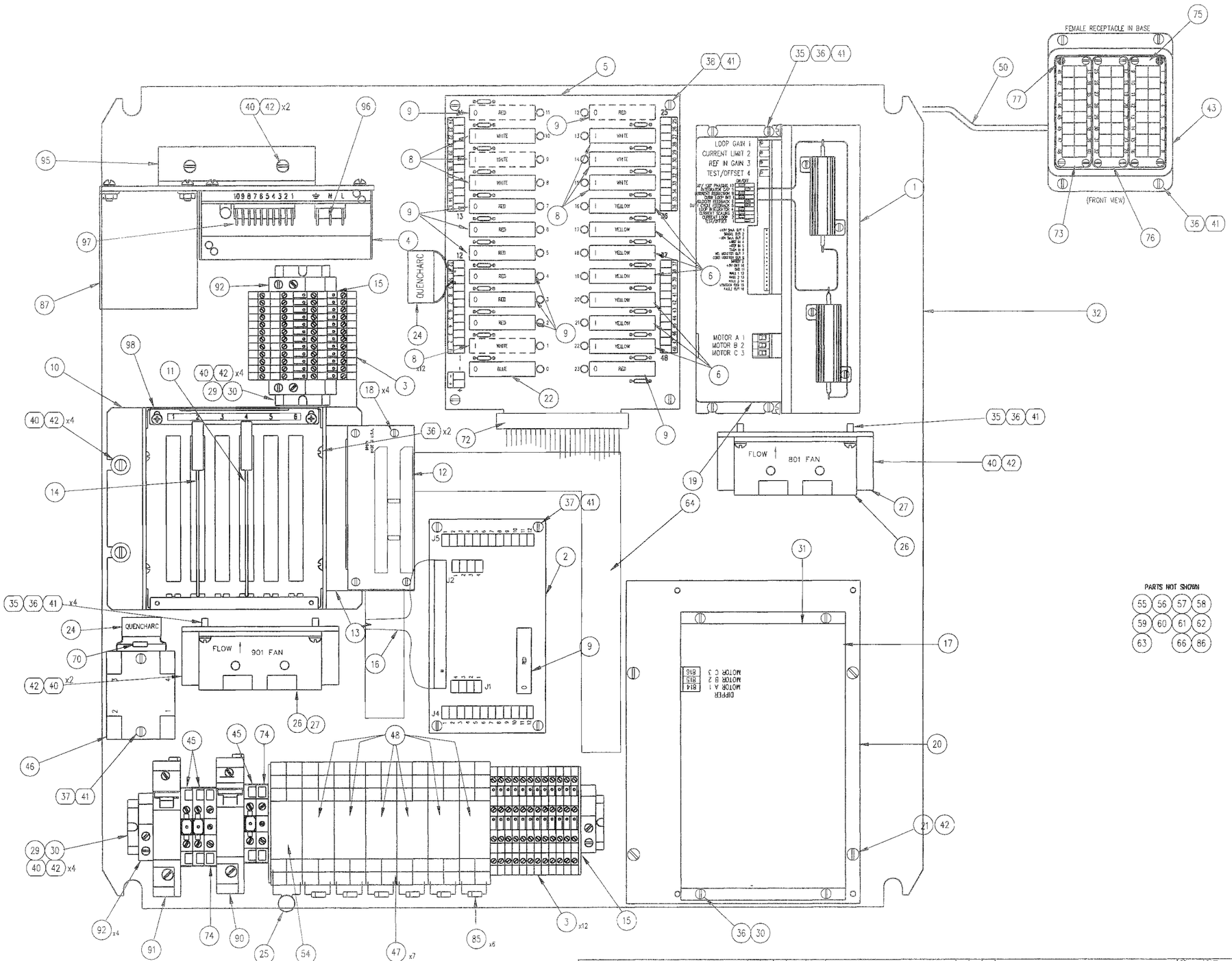

4. DEBURR
3. SURFACE FINISH 125
2. ALL THREADS CLASS 2A OR 2B
1. PARTS TO CONFORM TO RIMROCK CORP. ENGR. & MFG. STANDARDS

NOTES (UNLESS OTHERWISE SPECIFIED)

ER	DATE	REMARKS	LET	DR	CK	ER	DATE	REMARKS	LET	DR	CK
REVISIONS						REVISIONS					

MAT'L: SEE B.O.M.

RIMROCK®

RIMROCK CORPORATION
1700 RIMROCK ROAD
COLUMBUS, OHIO 43219

PHONE: 614-471-5926 FAX: 614-471-1073

*A Registered Trademark of Rimrock Corporation, Columbus, Ohio U.S.A.

TOLERANCES UNLESS OTHERWISE SPECIFIED
2-DIGIT DECIMALS= ±.010 FRACTIONS= ±1/64
3-DIGIT DECIMALS= ±.005 ANGLES= ±1/2
4-DIGIT DECIMALS= ±.0005

DR	DATE	SCALE	PIC
JPS	11.24.98	FULL	
CK	DATE	ER 1001	SHEET 3 OF 4

DRAWING NO. 406D09934-21 REV

DRAWING NAME PANEL ASSY

FOR 405 SERVO LADLE IN 24X24 BOX

THIS DRAWING IS THE PROPERTY OF RIMROCK CORP. AND IS FOR THE CONFIDENTIAL USE OF THE BUYER OR SUPPLIER OF THIS EQUIPMENT

WIRE #'S 38,71,72,73
48" LONG

WIRE #'S 16,55,56
30" LONG

WIRE #'S GND
48" LONG

MACHINE CONNECTIONS

REF. DWG 406D11118-600 CONTROL CABLE

NOTE: DIPPER MOTOR HALL EFFECT CABLE= 16" LONG.
ENCODER CABLES= 36" LONG.
ARM MOTOR HALL EFFECT CABLE= 32" LONG.
DIPPER MOTOR REFERENCE CABLE= 24" LONG.
ARM MOTOR REFERENCE CABLE= 30" LONG.

NOTE:
ATTACH GROUND WIRE
TO GROUND SCREWS
ON CONNECTORS

FEMALE RECEPTACLE IN BASE

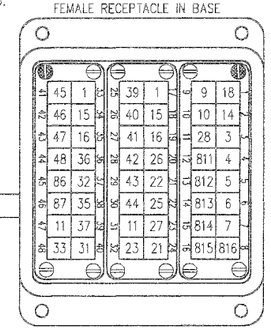

(FRONT VIEW)

FEMALE RECEPTACLE IN BASE

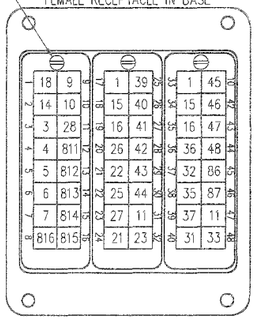

(REAR VIEW)

POWER CONNECTIONS

(PLUG NOT TO SCALE)

DOOR SWITCH 801-DS

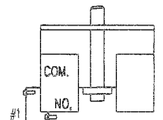

NOTE: WIRES 1 & 13 ARE FROM
POWER TERMINAL STRIP
14" LONG

POWER CONNECTIONS

(PLUG NOT TO SCALE)

801-J1

FEMALE CONNECTOR
MALE PINS

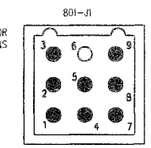

(REAR VIEW)

P/N	WIRE #
1	1
2	81
3	15
4	13
5	80
6	–
7	11
8	82
9	16

801-J2

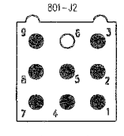

MALE CONNECTOR
FEMALE PINS

(REAR VIEW)

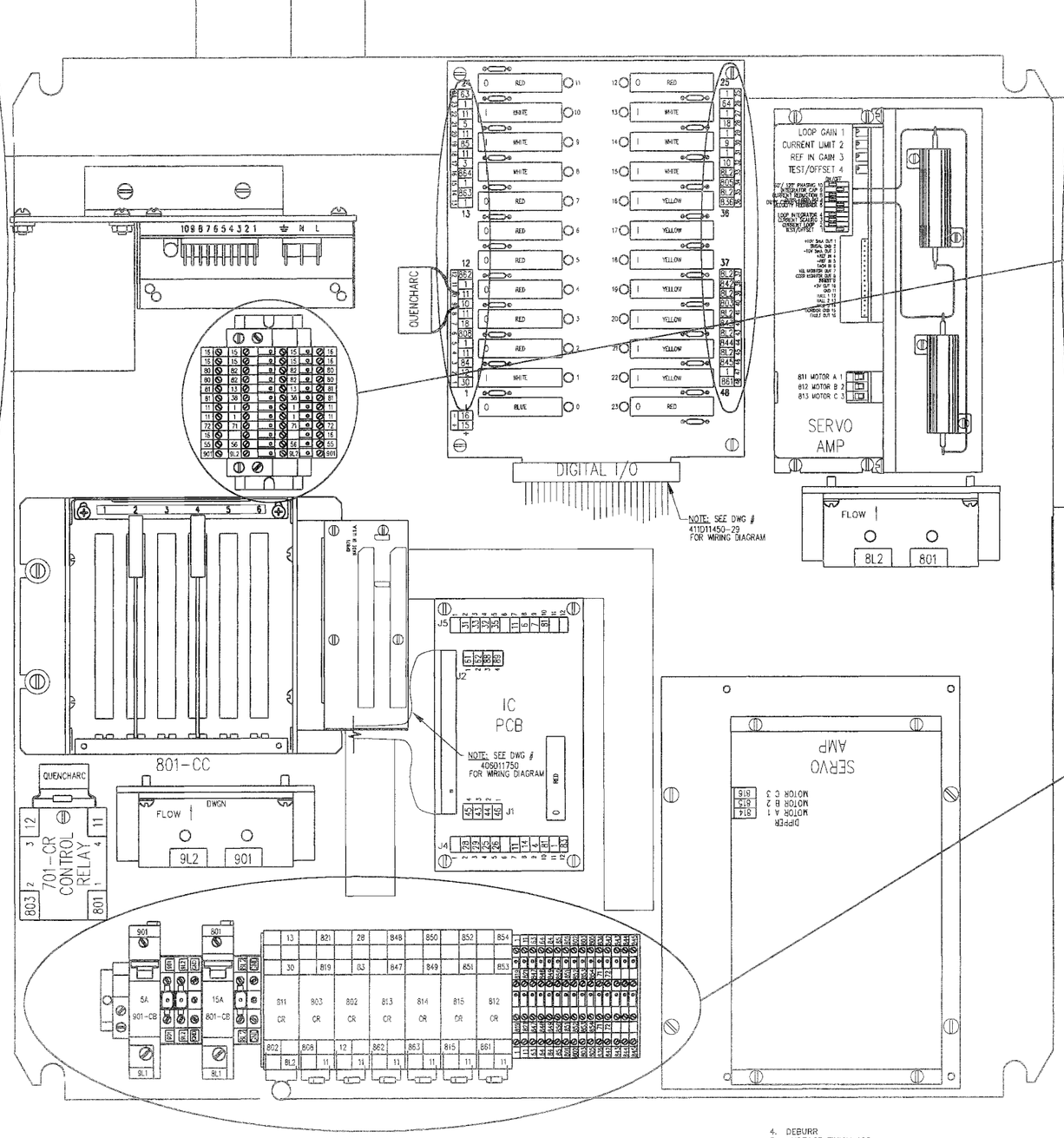

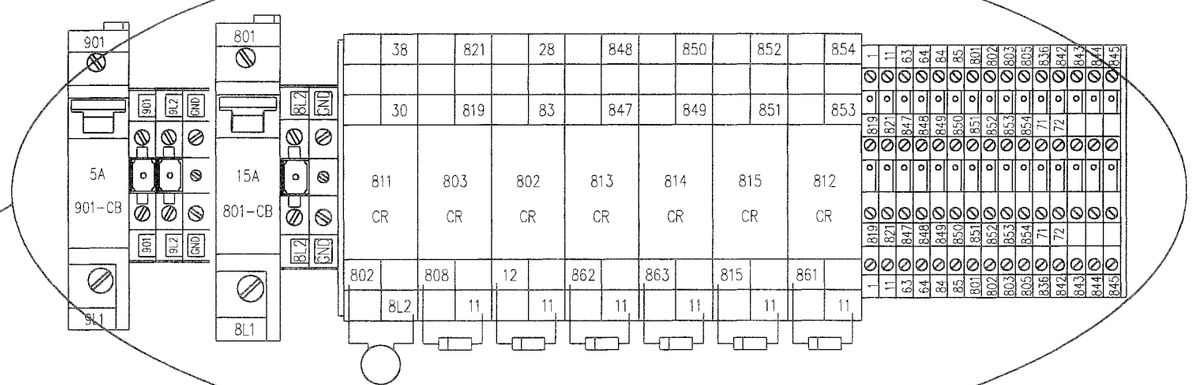

CRITICAL WIRE SIZE AND COLOR
12 AWG BLACK 701 ON 701-CR TO 701-CR
14 AWG RED 751, 752, 753 TO EPIC CONNECTOR
14 AWG GREEN GND
16 AWG YELLOW 71, 72
16 AWG BLUE 1, 13 TO DOOR SWITCH
16 AWG BLUE 13, 38
20 AWG WHITE 7L2
20 AWG YELLOW: 714,715,736-739,741-748
20 AWG RED ALL REMAINING 120 VOLT AC WIRES
20 AWG BLUE ALL 5-24 VOLTAGE WIRES THAT DO NOT USE CABLES

NOTES (UNLESS OTHERWISE SPECIFIED)
1. PARTS TO CONFORM TO RIMROCK CORP. ENGR. & MFG. STANDARDS
2. ALL THREADS CLASS 2A OR 2B
3. SURFACE FINISH 125
4. DEBURR

REVISIONS

ER	DATE	REMARKS	LET	DR	CK

MAT'L:

RIMROCK CORPORATION
1700 RIMROCK ROAD
COLUMBUS, OHIO 43219
PHONE: 614-471-5928 FAX: 614-471-1073
A Registered Trademark of Rimrock Corporation, Columbus, Ohio U.S.A.

TOLERANCES UNLESS OTHERWISE SPECIFIED
2-DIGIT DECIMALS= ±.010 FRACTIONS= ±1/64
3-DIGIT DECIMALS= ±.005 ANGLES= ±1/2
4-DIGIT DECIMALS= ±.0005

DR	DATE	SCALE	PIC
JPS	11.24.98	FULL	
CK	DATE	ER 1001	SHEET 4 OF 4

DRAWING NO. 406D09934-21 REV

DRAWING NAME PANEL ASSY.

FOR 405 SERVO LADLE IN 24X24 BOX

THIS DRAWING IS THE PROPERTY OF RIMROCK CORP. AND IS FOR THE CONFIDENTIAL USE OF THE BUYER OR SUPPLIER OF THIS EQUIPMENT