THERMAL CARE

Product Catalog

NQ Series

Portable and Remote Air-Cooled Condenser Chillers

4 to 43 Tons

Page Intentionally Blank

Contents

Standard Features

NQA10 with PLC Controller Option

The need for portable, self-contained, dependable industrial chilled water systems led to the development of our NQ Series chillers. Our 40 years of experience in industrial cooling equipment design and manufacturing combined with the best available component technologies results in a solid performing portable chiller that provides the dependable performance required for industrial applications. All NQ Series chillers are produced in our ISO 9001:2008 certified facility.

Easy to Install

Compact and easy to maneuver into position with a built-in process fluid reservoir and pump wired and piped ready for simple field connections our NQ Series chillers are easy to install.

Complete Chilled Water System

Built in a heavy-duty industrial machine cabinet with casters, our chiller includes a properly sized coolant reservoir and pump to eliminate the need to source and install multiple components.

Rugged, Compact Design

With our components neatly arranged in the cabinets we make good use of space while maintaining a balance between minimized floor space and easy access for maintenance and operation.

Electrical Components Mounted and Wired

All electrical components and sensors are mounted, wired, and fully tested at the factory to reduce installation time and ensure the chiller can be up and running quickly.

Tools Free Cabinet Access

Multiple heavy-gauge machine access doors with industrial grade tools-free latches provide easy access to all components for quick start-up, operation, and maintenance.

Reliable

The use of the best available components and control software combined with our extensive experience in providing industrial cooling equipment ensures our chillers provide outstanding reliability.

Direct-Drive Scroll Compressors

Direct drive hermetic scroll compressors with their proven longevity in industrial cooling applications provide outstanding reliability, low-maintenance, and high-efficiency operation.

Stainless Steel Evaporators

Stainless steel plate copper brazed evaporators provide maximum performance, long life, and a level of corrosion protection not available in conventional steel shell and copper tube evaporators.

Stainless Steel Pump

All pumps are stainless steel and designed for peak performance while providing the utmost in corrosion protection and a long useful life under harsh industrial conditions.

Nonferrous Reservoir and Water Lines

All nonferrous water lines and a nonferrous insulated reservoir eliminate the potential for rust formation in the chiller and provide maximum protection from corrosion.

Evaporator Inlet Strainer

An evaporator inlet strainer provides a built-in filtration system to keep debris in the process fluid from causing costly downtime and repair due to a clogged chiller evaporator.

Powerful Controls

Our control system provides an excellent combination of proven hardware and a powerful software control system for outstanding performance that is reliable and easy to use.

Standard Control System Operator Interface

Compressor Protection Technology

Our compressor protection technology provides start-to-start anti-recycle compressor control logic which limits compressor cycling under low-loads to extend compressor life.

Compressor and Pump Run Hour Displays

The ability to store and recall total compressor and pump running hours provides a very useful tool for monitoring actual total run time to scheduling planned maintenance.

Power Monitor

The power monitor provides protection from improper power causing extensive damage to the compressor and pump due to main power phase reversal or loss of phase.

Temperature Deviation Warnings and Alarms

The deviation warning provides a visual alert of a potential problem before a fault occurs. If the condition gets worse the alarm sounds an alarm and stops the chiller to prevent equipment damage.

Adjustable Deviation Alarm Time Delays

Adjustable deviation alarms provides a way to program a start-up time delay to deactivate the alarms low enough for the process loop to stabilize without causing nuisance temperature alarms.

Reservoir Low Level Alarm

The reservoir low level alarm provides protection of the process pump and chiller from expensive damage that can be caused if the reservoir level is critically low and the chiller operates dry.

Master Reset

The master reset function provides a quick and easy way to reset the control system and restore it to factory default settings should a control parameter be mistakenly changed.

Supply and Return Temperature Displays

The ability to toggle between the supply and return temperatures provides a simple way to monitor the process conditions and quickly check the chiller operation.

Other Alarms

Loss of flow, freezestat, high and low refrigeration pressure, temperature sensor faults, and freezestat sensor fault alarms for additional system monitoring.

C-UL508A Control Panel

Built for heavy-duty industrial operation we use a NEMA-12 control panel, high quality components, and 24 VDC control circuit power to provide safe, consistent, and reliable operation.

Rotary Non-Fused Disconnect Switch

The rotary non-fused disconnect switch provides a useful way to safely disconnect main power to the chiller for quick and easy movement of the chiller to another production area or during maintenance.

High-Quality 24 VDC Power Supply

The 24 volt DC power supply provides dependable control circuit power and isolates the control circuit from static interference to ensure stable and precise operation.

Warranty

5 year parts warranty on microprocessor
18 months parts warranty on entire unit
1 year labor warranty
$175 lifetime controller exchange after 5 years

Available Options

In most situations our standard chiller configuration is sufficient; however, there are applications where there is a need for additional features. For those applications we have a number of available options to enhance the flexibility of our NQ Series chillers.

Oversized Pumps

For applications where the process requires high process fluid flows or pressures a number of larger pumps are offered. In most cases this allows for three or more different pump options for each model of chiller.

High Flow Unit Design

For applications where the process requires higher process fluid flows and the increased internal pressure loss is a concern, an oversized evaporator is offered to reduce the internal fluid circuit pressure loss.

Low Temperature Air Operation

For applications where an indoor-duty chiller with an integral air-cooled condenser will use condenser air cooler than 60°F, a low temperature condenser air operation option is available to provide a head pressure control valve and receiver to allow the chiller to operate properly with 0°F to 110°F incoming condenser air.

Outdoor Duty Design

For applications where a chiller with an integral air-cooled condenser is installed outdoors an outdoor duty design is a available to provide a head pressure control valve, receiver, panel heater, weatherproof controller access window, and other various weatherproofing items needed to allow the chiller to operate in environments between -20°F and 110°F.

Remote Condenser Coil Coating

For applications where a chiller with an outdoor remote air-cooled condenser is installed within 5 miles of a salt water coast or areas where the air coil may be exposed to salt vapor a remote condenser coil coating is available to provide a rugged, abrasion resistant coating with very high tensile strength and flexibility to cover the aluminum fins, copper tubes, and end plates.

Pump and Tank Deduct

For applications where an external pumping system is provided a pump and tank deduct is available to eliminate the internal coolant reservoir, coolant pump, coolant pump starter, and coolant reservoir low level alarm safety. It is also possible to order the chiller with the pump only and no reservoir for applications where no internal reservoir is required but the pump is required.

Fully Divided Air Section

For applications where a 15-ton or larger chiller with an integral air-cooled condenser is used and there is need to allow the cabinet doors to be opened while the chiller is running a fully divide air section is available to provide an internal divider to separate the upper condenser air section from the lower mechanical portion of the chiller.

Stainless Steel Cabinet

This option is available for applications where there is a need for a stainless steel cabinet construction such as the food industry. A stainless steel cabinet is available to provide 304 stainless steel exterior cabinet doors, exterior cabinet frame, and control panel. The internal mechanical base and supports remain galvanized steel.

Automatic Electric Water Make-Up

For units with an integral reservoir where there is likely to be a regular loss of process fluid an automatic electric water make-up is available to provide a low-level sensor, high-level sensor, and an electric make-up water solenoid valve to allow for automatic replenishing of the chiller reservoir from an external source.

High Pressure Variable Speed Fans

For chillers with integral air-cooled condensers where there is a need to duct the warm discharge air out of the space where the chiller is located, high pressure variable-speed fans with EC motors are available to provide extra fan pressure required for discharge ductwork. This option is available on the NQA08 through NQA30 chillers.

With this option the standard constant-speed AC motor fan(s) are replaced with variable-speed Electrically Commutated (EC) fan motors and a

dedicated refrigerant pressure sensor and fan speed controller to adjust the speed of the fans to maintain refrigerant pressure. This provides energy efficient operation by adjusting the fan speed to only use the power needed to match the pressure loss of the external ductwork while maintaining proper refrigeration pressures for peak performance.

Chiller Model	Condenser Air Flow (cfm)	Standard Fans		High Pressure Variable Speed Fans	
		Available External Static Pressure (in W.C.)	Sound Pressure @ 1 Meter (dBA)	Available External Static Pressure (in W.C.)	Sound Pressure @ 1 Meter (dBA)
NQA08	8,000	0.10	74	0.32	75
NQA10	8,000	0.10	74	0.32	75
NQA13	8,000	0.00	82	0.32	75
NQA15	10,450	0.00	82	0.77	82
NQA20	18,000	0.00	85	0.79	84
NQA25	20,000	0.00	85	0.75	85
NQA30	24,000	0.23	87	1.12	82

The EC motors are slightly larger than the standard AC fan motors so units with this option will be approximately 2 inches taller than a standard unit. The EC motors and the high-pressure fans are both more efficient to the total power requirements remain the same as a standard fan unit.

ModBUS RTU Communications Port

For applications where there is a need to communicate with an external monitoring or control system using ModBUS RTU. This option provides additional controller expansion hardware and software and a RS-485 connector. A full list of available inputs/outputs as well as read/write privileges are shown in the NQ Series Installation and Operation Manual.

The standard controller has one expansion slot which this option uses so this option is not available with the remote hand-held controller or 4 to 20 mA coolant supply temperature retransmit options. The chiller can operate with only one communications protocol so this option is not available with any other communications port option.

SPI Communications Port

For applications where there is a need to communicate with an external monitoring or control system using SPI communications a SPI communications port is available to provide additional controller expansion hardware and software and a RS-485 connector. A full list of available inputs/outputs as well as read/write privileges are shown in the NQ Series Installation and Operation Manual.

The standard controller has one expansion slot which this option uses so this option is not available with the remote hand-held controller or 4 to 20 mA coolant supply temperature retransmit options. The chiller can operate with only one communications protocol so this option is not available with any other communications port option. This option is not available with the PLC controller option.

BACnet Communications Port

For applications where there is a need to communicate with an external monitoring or control system using BACnet communications a BACnet communications port is available to provide additional controller expansion hardware and software and a RS-485 connector.

For units ordered with the standard controller this option adds a ModBUS expansion board to the controller, a ModBUS to BACnet gateway, as well as a RS-485 connector. The standard controller has one expansion slot which this option uses so this option is not available with the remote hand-held controller or 4 to 20 mA coolant supply temperature retransmit options.

For chillers ordered with the PLC controller option this option adds a ModBUS expansion cassette, a ModBUS to BACnet gateway, as well as a RS-485 connector.

The chiller can operate with only one communications protocol so this option is not available with any other communications port option.

LonWorks Communications Port

For applications where there is a need to communicate with an external monitoring or control system using LonWorks communications a LonWorks communications port is available to provide additional controller expansion hardware and software and a RS-485 connector.

For units ordered with the standard controller this option adds a ModBUS expansion board to the controller, a ModBUS to LonWorks gateway, as well as a RS-485 connector. The standard controller has one expansion slot which this option uses so this option is not available with the remote hand-held controller or 4 to 20 mA coolant supply temperature retransmit options.

For chillers ordered with the PLC controller option this option adds a ModBUS expansion cassette, a ModBUS to BACnet gateway, as well as a RS-485 connector.

The chiller can operate with only one communications protocol so this option is not available with any other communications port option.

Coolant Supply Temperature Retransmit

For applications where the is a need for a 4 to 20 mA output of the coolant temperature leaving the chiller a 4 to 20 mA coolant supply temperature retransmit is available to provide a 4 to 20 mA output signal of the coolant supply temperature.

For units ordered with the standard controller this option adds an analog output expansion board. There is one expansion port on the standard control board so this option is not available with the remote hand-held controller or communication port options.

For units ordered with the PLC controller option this option provides an output on one of the PLC analog output cassettes.

E-Stop Button

For applications where there is a need for an emergency stop button an E-stop button is available to provide a mushroom-type red emergency stop button on the front of the chiller. This button functions in the same way as pushing the stop button and provides a quick and easy way to stop the chiller and requires a manual reset to be able to restart the chiller again.

Hand-Held Controller

For applications where there is a need for a remote hand-held controller in addition to the machine-mounted controller a hand-held controller is available for units with the standard controller to provide an expansion card, remote hand-held controller, and 50 foot cable. The interconnecting cable may be extended up to 300 feet. This option is not available with the PLC controller option.

Special Color Paint

For applications where there is a need to match the color of the chiller cabinet to a specific color special color paint this option is available to provide a special color painting of the exterior of the control panel and cabinetry panels with an air-dry, wet-coat enamel paint finish. This is for a single-color paint scheme. For applications where multiple colors are required on the chiller contact the factory for assistance.

5 Year Compressor Parts Warranty

This option extends the standard 12 month compressor parts warranty to 60 months for those applications where there is a need for an added level of compressor parts warranty coverage.

PLC Controller

Optional PLC Controller Color Touch-Screen HMI

For applications where there is a need for graphically enhanced diagnostic and operational display capabilities a PLC controller is available to provide a PLC controller and color touch screen user interface. This option replaces the standard controller and is not available with the hand-held controller option. This option provides a graphical piping and instrumentation diagram for the coolant and refrigeration circuits including operating conditions and states. In addition there is a built-in user guide with a number of component pictures with help and troubleshooting screens to make operating, adjusting, and servicing the chiller quick and easy.

Refrigerant Pressure Transducers

For applications where the PLC controller option is purchased and there is a need to monitor refrigerant pressures, refrigerant pressure transducers are available to provide refrigerant pressure transducers and additional screens to display the chiller refrigerant suction and discharge pressures on the color touch screen display.

General Data

Table 1 – Air-Cooled Chiller General Data (60 Hz)

Model	NQA04	NQA05	NQA08	NQA10	NQA13	NQA15	NQA20	NQA25	NQA30
Cooling Capacity (tons)[1]	4.5	5.3	8.0	11.2	12.5	15.0	20.5	25.4	30.0
Set Point Range (°F)	20 to 80	20 to 80	20 to 80	20 to 80	20 to 80	20 to 80	20 to 80	20 to 80	20 to 80
Refrigerant	R410A	R410A	R410A	R410A	R410A	R410A	R410A	R410A	R410A
Condenser Air Flow (cfm)	4,000	4,000	8,000	8,000	8,000	10,450	18,000	20,000	24,000
Sound Pressure @ 1 meter (dBA)[2]	71	71	74	74	74	82	85	85	87
Minimum Unloaded Capacity (tons)	1.0	1.2	1.8	2.7	3.1	3.6	4.8	6.0	7.2
Pump Motor Size (hp)	1.5	1.5	1.5	1.5	1.5	3	3	5	5
Pump Flow (gpm)	11	12	19	27	30	36	48	60	72
Net Available Pump Pressure (psi)[3]	35	36	35	30	28	48	39	58	55
Unit MCA @ 460/3/60 (amps)[4]	15.6	18.1	26.1	30.9	36.5	44.3	55.5	70.0	83.1
Length (inches)	48	48	75	75	75	87	87	105	105
Width (inches)	35	35	35	35	35	41	41	41	41
Height w/standard fans (inches)	61	61	61	61	61	94	94	94	94
Height w/high pressure fans (inches)	n/a	n/a	63	63	63	96	96	96	96
Reservoir Holding Capacity (gal)	11	11	22	22	22	50	50	67	67
Process Connections (inches)	1.5	1.5	1.5	1.5	1.5	2	2	2	2
Shipping Weight (lbs)	720	720	1,195	1,195	1,215	3,200	3,300	3,800	4,150

[1]Cooling tons based on 12,000 BTU/Hr/ton with 50°F leaving coolant and 95°F ambient air.
[2]Sound power shown is for standard high-efficiency constant-speed AC motor fans. A high-pressure variable-speed EC motor fan option is available for NQA08 and larger units which changes the sound pressure at 1 meter (dBA) to: 75 for NQA08-10, 82 for NQA15, 84 for NQA20, 85 for NQA25, and 82 for NQA30.
[3]Net available pressure at outlet of chiller is pump discharge pressure less internal coolant circuit pressure loss.
[4]MCA is minimum circuit amps (for wire sizing), complies with NEC, Section 430-24.

Table 2 – Water-Cooled Chiller General Data (60 Hz)

Model	NQW05	NQW08	NQW10	NQW15	NQW20	NQW25	NQW30	NQW35	NQW40
Cooling Capacity (tons)[1]	5.7	8.4	12.4	16.5	22.8	28.1	33.0	38.5	42.8
Set Point Range (°F)	20 to 80	20 to 80	20 to 80	20 to 80	20 to 80	20 to 80	20 to 80	20 to 80	20 to 80
Refrigerant	R410A	R410A	R410A	R410A	R410A	R410A	R410A	R410A	R410A
Condenser Water Flow (gpm)	17	24	36	48	65	82	96	111	124
Sound Pressure @ 1 meter (dBA)	71	74	74	82	86	85	87	87	87
Minimum Unloaded Capacity (tons)	1.3	1.9	2.9	3.9	5.2	6.6	7.8	8.9	9.9
Pump Motor Size (hp)	1.5	1.5	1.5	3	3	5	5	5	5
Pump Flow (gpm)	13	20	29	39	54	67	79	92	102
Net Available Pump Pressure (psi)[2]	35	34	28	45	32	54	51	48	44
Unit MCA @ 460/3/60 (amps)[3]	16.4	22.6	27.4	39.7	46.3	60.8	69.3	73.7	77.2
Length (inches)	48	75	75	75	87	87	105	105	105
Width (inches)	35	35	35	35	41	41	41	41	41
Height (inches)	54	54	54	54	47	47	47	47	47
Reservoir Holding Capacity (gal)	11	22	22	22	50	50	67	67	67
Process Connections (inches)	1.5	1.5	1.5	1.5	2	2	2	2.5	2.5
Condenser Connections (inches)	1.5	1.5	1.5	1.5	2.5	2.5	2.5	2.5	3
Shipping Weight (lbs)	720	1,195	1,195	1,315	1,900	2,100	2,250	3,400	3,900

[1]Cooling tons based on 12,000 BTU/Hr/ton with 50°F leaving coolant and 85°F condenser water.
[2]Net available pressure at outlet of chiller is pump discharge pressure less internal coolant circuit pressure loss.
[3]MCA is minimum circuit amps (for wire sizing), complies with NEC, Section 430-24.

Table 3 – Remote Air-Cooled Condenser Chiller General Data (60 Hz)

Model	NQR05	NQR08	NQR10	NQR15	NQR20	NQR25	NQR30	NQR35	NQR40
Cooling Capacity (tons)[1]	5.6	8.0	11.7	15.7	21.4	26.6	31.3	35.7	40.0
Set Point Range (°F)	20 to 80	20 to 80	20 to 80	20 to 80	20 to 80	20 to 80	20 to 80	20 to 80	20 to 80
Refrigerant	R410A	R410A	R410A	R410A	R410A	R410A	R410A	R410A	R410A
Sound Pressure @ 1 meter (dBA)[2]	71	74	74	82	86	85	87	87	87
Minimum Unloaded Capacity (tons)	1.2	1.8	2.7	3.6	4.8	6.0	7.2	8.4	9.6
Pump Motor Size (hp)	1.5	1.5	1.5	3	3	5	5	5	5
Pump Flow (gpm)	13	18	27	36	48	61	73	83	92
Net Available Pump Pressure (psi)[3]	35	36	30	48	39	57	54	53	50
Unit MCA @ 460/3/60 (amps)[4]	16.4	22.6	27.4	39.7	46.3	60.8	69.3	73.7	77.2
Length (inches)	48	75	75	75	87	87	105	105	105
Width (inches)	35	35	35	35	41	41	41	41	41
Height (inches)	54	54	54	54	47	47	47	47	47
Reservoir Holding Capacity (gal)	11	22	22	22	50	50	67	67	67
Process Connections (inches)	1.5	1.5	1.5	1.5	2	2	2	2.5	2.5
Refrigerant Liquid Line (inches)	0.625	0.625	0.875	0.875	0.875	1.125	1.125	1.375	1.375
Refrigerant Suction Line (inches)	0.625	0.625	0.875	0.875	0.875	1.125	1.125	1.375	1.375
Shipping Weight (lbs)	720	1,195	1,195	1,315	1,900	2,100	2,250	3,400	3,900

[1]Cooling tons based on 12,000 BTU/Hr/ton with 50°F leaving coolant and 95°F ambient air.
[2]Sound pressure is for chiller unit only, see Remote Air-Cooled Condenser table for remote condenser sound pressure ratings.
[3]Net available pressure at outlet of chiller is pump discharge pressure less internal coolant circuit pressure loss.
[4]MCA is minimum circuit amps (for wire sizing), complies with NEC, Section 430-24.

Table 4 – Remote Air-Cooled Condenser General Data (60 Hz)

Condenser Model	Chiller Used With	Dimensions (in)			Weights (Lbs)		Total Air Flow (cfm)	Sound Pressure (dBA)[1]	MCA @ 460/3/60 (amps)[2]	Refrigerant Connections (in)	
		L	W	H	Ship	Oper				Inlet	Outlet
KCM009	NQR05	53.625	43.625	48.125	245	Operating weight varies based on system charge and operating conditions	6,870	60	1.4	0.875	1.125
KCM011	NQR08	53.625	43.625	48.125	265		6,620	60	1.4	0.875	1.125
KCM014	NQR10	93.625	43.625	48.125	415		14,400	62	2.6	1.375	1.125
KCL023	NQR15	125.750	45.625	54.000	670		24,000	72	7.0	2.125	1.375
KCL030	NQR20	125.750	45.625	54.000	720		22,600	72	7.0	2.125	1.625
KCL037	NQR25	125.750	45.625	54.000	800		20,600	72	7.0	2.125	1.625
KCL045	NQR30	180.750	45.625	54.000	1,075		33,900	73	10.1	2.625	1.625
KCL054	NQR35	180.750	45.625	54.000	1,175		32,000	73	10.1	2.625	2.125
KCL056	NQR40	180.750	45.625	54.000	1,200		30,900	73	10.1	2.625	2.125

[1]Sound pressure at 3 meters.
[2]MCA is minimum circuit amps (for wire sizing) as provided by the remote condenser manufacturer.

Table 5 – Air-Cooled Chiller Electrical Data (60 Hz)

Model	Process Pump Size	Rated Voltage	Allowable Power		Compressor Data				Condenser Fan Data			Pump Data	Unit Data	
					Comp 1		Comp 2		Fan 1	Fan 2	Fan 2			
			Min	Max	RLA[1]	LRA[2]	RLA[1]	LRA[2]	FLA[3]	FLA[3]	FLA[3]	FLA[3]	MCA[4]	MOP[5]
NQA04	None	230/3/60	207	253	16.0	110.0	-	-	2.9	-	-	0.0	25.4	41.4
	1.5 HP	230/3/60	207	253	16.0	110.0	-	-	2.9	-	-	6.0	31.4	47.4
	3 HP	230/3/60	207	253	16.0	110.0	-	-	2.9	-	-	9.6	35.0	51.0
	5 HP	230/3/60	207	253	16.0	110.0	-	-	2.9	-	-	15.2	40.6	56.6
	None	460/3/60	414	506	7.8	52.0	-	-	1.8	-	-	0.0	12.6	20.4
	1.5 HP	460/3/60	414	506	7.8	52.0	-	-	1.8	-	-	3.0	15.6	23.4
	3 HP	460/3/60	414	506	7.8	52.0	-	-	1.8	-	-	4.8	17.4	25.2
	5 HP	460/3/60	414	506	7.8	52.0	-	-	1.8	-	-	7.6	20.2	28.0
	None	575/3/60	518	633	5.7	38.9	-	-	1.7	-	-	0.0	9.5	15.2
	1.5 HP	575/3/60	518	633	5.7	38.9	-	-	1.7	-	-	2.4	11.9	17.6
	3 HP	575/3/60	518	633	5.7	38.9	-	-	1.7	-	-	3.8	13.3	19.0
	5 HP	575/3/60	518	633	5.7	38.9	-	-	1.7	-	-	6.1	15.6	21.3
NQA05	None	230/3/60	207	253	19.0	123.0	-	-	2.9	-	-	0.0	29.2	48.2
	1.5 HP	230/3/60	207	253	19.0	123.0	-	-	2.9	-	-	6.0	35.2	54.2
	3 HP	230/3/60	207	253	19.0	123.0	-	-	2.9	-	-	9.6	38.8	57.8
	5 HP	230/3/60	207	253	19.0	123.0	-	-	2.9	-	-	15.2	44.4	63.4
	None	460/3/60	414	506	9.7	62.0	-	-	1.8	-	-	0.0	15.1	24.9
	1.5 HP	460/3/60	414	506	9.7	62.0	-	-	1.8	-	-	3.0	18.1	27.9
	3 HP	460/3/60	414	506	9.7	62.0	-	-	1.8	-	-	4.8	19.9	29.7
	5 HP	460/3/60	414	506	9.7	62.0	-	-	1.8	-	-	7.6	22.7	32.5
	None	575/3/60	518	633	7.4	50.0	-	-	1.4	-	-	0.0	11.6	19.0
	1.5 HP	575/3/60	518	633	7.4	50.0	-	-	1.4	-	-	2.4	14.0	21.4
	3 HP	575/3/60	518	633	7.4	50.0	-	-	1.4	-	-	3.8	15.5	22.9
	5 HP	575/3/60	518	633	7.4	50.0	-	-	1.4	-	-	6.1	17.7	25.1
NQA08	None	230/3/60	207	253	29.5	195.0	-	-	2.9	2.9	-	0.0	42.3	71.8
	1.5 HP	230/3/60	207	253	29.5	195.0	-	-	2.9	2.9	-	6.0	51.2	80.7
	3 HP	230/3/60	207	253	29.5	195.0	-	-	2.9	2.9	-	9.6	54.8	84.3
	5 HP	230/3/60	207	253	29.5	195.0	-	-	2.9	2.9	-	15.2	60.4	89.9
	7.5 HP	230/3/60	207	253	29.5	195.0	-	-	2.9	2.9	-	22.0	67.2	96.7
	None	460/3/60	414	506	14.7	95.0	-	-	1.8	1.8	-	0.0	23.1	37.9
	1.5 HP	460/3/60	414	506	14.7	95.0	-	-	1.8	1.8	-	3.0	26.1	40.9
	3 HP	460/3/60	414	506	14.7	95.0	-	-	1.8	1.8	-	4.8	27.9	42.7
	5 HP	460/3/60	414	506	14.7	95.0	-	-	1.8	1.8	-	7.6	30.7	45.5
	7.5 HP	460/3/60	414	506	14.7	95.0	-	-	1.8	1.8	-	11.0	34.1	48.9
	None	575/3/60	518	633	12.2	80.0	-	-	1.4	1.4	-	0.0	19.0	31.2
	1.5 HP	575/3/60	518	633	12.2	80.0	-	-	1.4	1.4	-	2.4	21.4	33.6
	3 HP	575/3/60	518	633	12.2	80.0	-	-	1.4	1.4	-	3.8	22.9	35.1
	5 HP	575/3/60	518	633	12.2	80.0	-	-	1.4	1.4	-	6.1	25.1	37.3
	7.5 HP	575/3/60	518	633	12.2	80.0	-	-	1.4	1.4	-	8.8	27.8	40.0

[1]RLA is rated load amps.
[2]LRA is locked rotor amps.
[3]FLA is full load amps.
[4]MCA is minimum circuit amps (for wire sizing) and includes compressor, pump, and control circuit.
[5]MOP is maximum over-current protection.

Table 5 – Air-Cooled Chiller Electrical Data (60 Hz) - continued

Model	Process Pump Size	Rated Voltage	Allowable Power		Compressor Data				Condenser Fan Data			Pump Data	Unit Data	
					Comp 1		Comp 2		Fan 1	Fan 2	Fan 2			
			Min	Max	RLA[1]	LRA[2]	RLA[1]	LRA[2]	FLA[3]	FLA[3]	FLA[3]	FLA[3]	MCA[4]	MOP[5]
NQA10	None	230/3/60	207	253	48.1	245.0	-	-	2.9	2.9	-	0.0	68.4	116.5
	1.5 HP	230/3/60	207	253	48.1	245.0	-	-	2.9	2.9	-	6.0	74.4	122.5
	3 HP	230/3/60	207	253	48.1	245.0	-	-	2.9	2.9	-	9.6	78.0	126.1
	5 HP	230/3/60	207	253	48.1	245.0	-	-	2.9	2.9	-	15.2	83.6	131.7
	7.5 HP	230/3/60	207	253	48.1	245.0	-	-	2.9	2.9	-	22.0	90.4	138.5
	None	460/3/60	414	506	18.6	125.0	-	-	1.8	1.8	-	0.0	27.9	46.5
	1.5 HP	460/3/60	414	506	18.6	125.0	-	-	1.8	1.8	-	3.0	30.9	49.5
	3 HP	460/3/60	414	506	18.6	125.0	-	-	1.8	1.8	-	4.8	32.7	51.3
	5 HP	460/3/60	414	506	18.6	125.0	-	-	1.8	1.8	-	7.6	35.5	54.1
	7.5 HP	460/3/60	414	506	18.6	125.0	-	-	1.8	1.8	-	11.0	38.9	57.5
	None	575/3/60	518	633	14.7	100.0	-	-	1.4	1.4	-	0.0	22.1	36.8
	1.5 HP	575/3/60	518	633	14.7	100.0	-	-	1.4	1.4	-	2.4	24.5	39.2
	3 HP	575/3/60	518	633	14.7	100.0	-	-	1.4	1.4	-	3.8	26.0	40.7
	5 HP	575/3/60	518	633	14.7	100.0	-	-	1.4	1.4	-	6.1	28.2	42.9
	7.5 HP	575/3/60	518	633	14.7	100.0	-	-	1.4	1.4	-	8.8	30.9	45.6
NQA13	None	230/3/60	207	253	51.3	300.0	-	-	2.9	2.9	-	0.0	72.4	123.7
	1.5 HP	230/3/60	207	253	51.3	300.0	-	-	2.9	2.9	-	6.0	78.4	129.7
	3 HP	230/3/60	207	253	51.3	300.0	-	-	2.9	2.9	-	9.6	82.0	133.3
	5 HP	230/3/60	207	253	51.3	300.0	-	-	2.9	2.9	-	15.2	87.6	138.9
	7.5 HP	230/3/60	207	253	51.3	300.0	-	-	2.9	2.9	-	22.0	94.4	145.7
	None	460/3/60	414	506	23.1	150.0	-	-	1.8	1.8	-	0.0	33.5	56.6
	1.5 HP	460/3/60	414	506	23.1	150.0	-	-	1.8	1.8	-	3.0	36.5	59.6
	3 HP	460/3/60	414	506	23.1	150.0	-	-	1.8	1.8	-	4.8	38.3	61.4
	5 HP	460/3/60	414	506	23.1	150.0	-	-	1.8	1.8	-	7.6	41.1	64.2
	7.5 HP	460/3/60	414	506	23.1	150.0	-	-	1.8	1.8	-	11.0	44.5	67.6
	None	575/3/60	518	633	19.9	109.0	-	-	1.4	1.4	-	0.0	28.6	48.5
	1.5 HP	575/3/60	518	633	19.9	109.0	-	-	1.4	1.4	-	2.4	31.0	50.9
	3 HP	575/3/60	518	633	19.9	109.0	-	-	1.4	1.4	-	3.8	32.5	52.4
	5 HP	575/3/60	518	633	19.9	109.0	-	-	1.4	1.4	-	6.1	34.7	54.6
	7.5 HP	575/3/60	518	633	19.9	109.0	-	-	1.4	1.4	-	8.8	37.4	57.3
NQA15	None	230/3/60	207	253	55.8	340.0	-	-	8.3	-	-	0.0	80.6	136.4
	3 HP	230/3/60	207	253	55.8	340.0	-	-	8.3	-	-	9.6	90.2	146.0
	5 HP	230/3/60	207	253	55.8	340.0	-	-	8.3	-	-	15.2	95.8	151.6
	7.5 HP	230/3/60	207	253	55.8	340.0	-	-	8.3	-	-	22.0	102.6	158.4
	None	460/3/60	414	506	26.9	173.0	-	-	4.6	-	-	0.0	39.5	66.4
	3 HP	460/3/60	414	506	26.9	173.0	-	-	4.6	-	-	4.8	44.3	71.2
	5 HP	460/3/60	414	506	26.9	173.0	-	-	4.6	-	-	7.6	47.1	74.0
	7.5 HP	460/3/60	414	506	26.9	173.0	-	-	4.6	-	-	11.0	50.5	77.4
	None	575/3/60	518	633	23.7	132.0	-	-	3.7	-	-	0.0	34.3	58.0
	3 HP	575/3/60	518	633	23.7	132.0	-	-	3.7	-	-	3.8	38.1	61.8
	5 HP	575/3/60	518	633	23.7	132.0	-	-	3.7	-	-	6.1	40.3	64.0
	7.5 HP	575/3/60	518	633	23.7	132.0	-	-	3.7	-	-	8.8	43.1	66.8

[1]RLA is rated load amps.
[2]LRA is locked rotor amps.
[3]FLA is full load amps.
[4]MCA is minimum circuit amps (for wire sizing) and includes compressor, pump, and control circuit.
[5]MOP is maximum over-current protection.

Table 5 – Air-Cooled Chiller Electrical Data (60 Hz) - continued

Model	Process Pump Size	Rated Voltage	Allowable Power		Compressor Data				Condenser Fan Data			Pump Data	Unit Data	
					Comp 1		Comp 2		Fan 1	Fan 2	Fan 2			
			Min	Max	RLA[1]	LRA[2]	RLA[1]	LRA[2]	FLA[3]	FLA[3]	FLA[3]	FLA[3]	MCA[4]	MOP[5]
NQA20	None	230/3/60	207	253	33.3	239.0	33.3	239.0	8.3	8.3	-	0.0	94.0	127.3
	3 HP	230/3/60	207	253	33.3	239.0	33.3	239.0	8.3	8.3	-	9.6	103.6	136.9
	5 HP	230/3/60	207	253	33.3	239.0	33.3	239.0	8.3	8.3	-	15.2	109.2	142.5
	7.5 HP	230/3/60	207	253	33.3	239.0	33.3	239.0	8.3	8.3	-	22.0	116.0	149.3
	10 HP	230/3/60	207	253	33.3	239.0	33.3	239.0	8.3	8.3	-	28.0	122.0	155.3
	None	460/3/60	414	506	17.9	125.0	17.9	125.0	4.6	4.6	-	0.0	50.7	68.6
	3 HP	460/3/60	414	506	17.9	125.0	17.9	125.0	4.6	4.6	-	4.8	55.5	73.4
	5 HP	460/3/60	414	506	17.9	125.0	17.9	125.0	4.6	4.6	-	7.6	58.3	76.2
	7.5 HP	460/3/60	414	506	17.9	125.0	17.9	125.0	4.6	4.6	-	11.0	61.7	79.6
	10 HP	460/3/60	414	506	17.9	125.0	17.9	125.0	4.6	4.6	-	14.0	64.7	82.6
	None	575/3/60	518	633	12.8	80.0	12.8	80.0	3.7	3.7	-	0.0	37.1	49.9
	3 HP	575/3/60	518	633	12.8	80.0	12.8	80.0	3.7	3.7	-	3.8	41.0	53.8
	5 HP	575/3/60	518	633	12.8	80.0	12.8	80.0	3.7	3.7	-	6.1	43.2	56.0
	7.5 HP	575/3/60	518	633	12.8	80.0	12.8	80.0	3.7	3.7	-	8.8	45.9	58.7
	10 HP	575/3/60	518	633	12.8	80.0	12.8	80.0	3.7	3.7	-	11.2	48.3	61.1
NQA25	None	230/3/60	207	253	51.3	300.0	51.3	300.0	8.3	8.3	-	0.0	134.5	185.8
	5 HP	230/3/60	207	253	51.3	300.0	51.3	300.0	8.3	8.3	-	15.2	149.7	201.0
	7.5 HP	230/3/60	207	253	51.3	300.0	51.3	300.0	8.3	8.3	-	22.0	156.5	207.8
	10 HP	230/3/60	207	253	51.3	300.0	51.3	300.0	8.3	8.3	-	28.0	162.5	213.8
	None	460/3/60	414	506	23.1	150.0	23.1	150.0	4.6	4.6	-	0.0	62.4	85.5
	5 HP	460/3/60	414	506	23.1	150.0	23.1	150.0	4.6	4.6	-	7.6	70.0	93.1
	7.5 HP	460/3/60	414	506	23.1	150.0	23.1	150.0	4.6	4.6	-	11.0	73.4	96.5
	10 HP	460/3/60	414	506	23.1	150.0	23.1	150.0	4.6	4.6	-	14.0	76.4	99.5
	None	575/3/60	518	633	19.9	109.0	19.9	109.0	3.7	3.7	-	0.0	53.1	73.0
	5 HP	575/3/60	518	633	19.9	109.0	19.9	109.0	3.7	3.7	-	6.1	59.2	79.1
	7.5 HP	575/3/60	518	633	19.9	109.0	19.9	109.0	3.7	3.7	-	8.8	61.9	81.8
	10 HP	575/3/60	518	633	19.9	109.0	19.9	109.0	3.7	3.7	-	11.2	64.3	84.2
NQA30	None	230/3/60	207	253	55.8	340.0	55.8	340.0	8.3	8.3	8.3	0.0	153.0	208.8
	5 HP	230/3/60	207	253	55.8	340.0	55.8	340.0	8.3	8.3	8.3	15.2	168.2	224.0
	7.5 HP	230/3/60	207	253	55.8	340.0	55.8	340.0	8.3	8.3	8.3	22.0	175.0	230.8
	10 HP	230/3/60	207	253	55.8	340.0	55.8	340.0	8.3	8.3	8.3	28.0	181.0	236.8
	None	460/3/60	414	506	26.9	173.0	26.9	173.0	4.6	4.6	4.6	0.0	75.5	102.4
	5 HP	460/3/60	414	506	26.9	173.0	26.9	173.0	4.6	4.6	4.6	7.6	83.1	110.0
	7.5 HP	460/3/60	414	506	26.9	173.0	26.9	173.0	4.6	4.6	4.6	11.0	86.5	113.4
	10 HP	460/3/60	414	506	26.9	173.0	26.9	173.0	4.6	4.6	4.6	14.0	89.5	116.4
	None	575/3/60	518	633	23.7	132.0	23.7	132.0	3.7	3.7	3.7	0.0	65.3	89.0
	5 HP	575/3/60	518	633	23.7	132.0	23.7	132.0	3.7	3.7	3.7	6.1	71.4	95.1
	7.5 HP	575/3/60	518	633	23.7	132.0	23.7	132.0	3.7	3.7	3.7	8.8	74.1	97.8
	10 HP	575/3/60	518	633	23.7	132.0	23.7	132.0	3.7	3.7	3.7	11.2	76.5	100.2

[1]RLA is rated load amps.
[2]LRA is locked rotor amps.
[3]FLA is full load amps.
[4]MCA is minimum circuit amps (for wire sizing) and includes compressor, pump, and control circuit.
[5]MOP is maximum over-current protection.

Table 6 – Water-Cooled & Remote Air-Cooled Condenser Chiller Electrical Data (60 Hz)

Model	Process Pump Size	Rated Voltage	Allowable Power Supply		Compressor Data				Pump Data	Unit Data	
					Comp 1		Comp 2				
			Min	Max	RLA[1]	LRA[2]	RLA[1]	LRA[2]	FLA[3]	MCA[4]	MOP[5]
NQW05 & NQR05	None	230/3/60	187	253	19.0	123.0	-	-	0.0	26.3	45.3
	1.5 HP	230/3/60	187	253	19.0	123.0	-	-	6.0	32.3	51.3
	3 HP	230/3/60	187	253	19.0	123.0	-	-	9.6	35.9	54.9
	5 HP	230/3/60	187	253	19.0	123.0	-	-	15.2	41.5	60.5
	None	460/3/60	414	506	9.7	62.0	-	-	0.0	13.4	23.1
	1.5 HP	460/3/60	414	506	9.7	62.0	-	-	3.0	16.4	26.1
	3 HP	460/3/60	414	506	9.7	62.0	-	-	4.8	18.2	27.9
	5 HP	460/3/60	414	506	9.7	62.0	-	-	7.6	21.0	30.7
	None	575/3/60	518	633	7.4	50.0	-	-	0.0	10.2	17.6
	1.5 HP	575/3/60	518	633	7.4	50.0	-	-	2.4	12.6	20.0
	3 HP	575/3/60	518	633	7.4	50.0	-	-	3.8	14.1	21.5
	5 HP	575/3/60	518	633	7.4	50.0	-	-	6.1	16.3	23.7
NQW08 & NQR08	None	230/3/60	187	253	29.5	195.0	-	-	0.0	39.4	68.9
	1.5 HP	230/3/60	187	253	29.5	195.0	-	-	6.0	45.4	74.9
	3 HP	230/3/60	187	253	29.5	195.0	-	-	9.6	49.0	78.5
	5 HP	230/3/60	187	253	29.5	195.0	-	-	15.2	54.6	84.1
	7.5 HP	230/3/60	187	253	29.5	195.0	-	-	22.0	61.4	90.9
	None	460/3/60	414	506	14.7	95.0	-	-	0.0	19.6	34.4
	1.5 HP	460/3/60	414	506	14.7	95.0	-	-	3.0	22.6	37.4
	3 HP	460/3/60	414	506	14.7	95.0	-	-	4.8	24.4	39.2
	5 HP	460/3/60	414	506	14.7	95.0	-	-	7.6	27.2	42.0
	7.5 HP	460/3/60	414	506	14.7	95.0	-	-	11.0	30.6	45.4
	None	575/3/60	518	633	12.2	80.0	-	-	0.0	16.2	28.4
	1.5 HP	575/3/60	518	633	12.2	80.0	-	-	2.4	18.6	30.8
	3 HP	575/3/60	518	633	12.2	80.0	-	-	3.8	20.1	32.3
	5 HP	575/3/60	518	633	12.2	80.0	-	-	6.1	22.3	34.5
	7.5 HP	575/3/60	518	633	12.2	80.0	-	-	8.8	25.0	37.2
NQW10 & NQR10	None	230/3/60	187	253	48.1	245.0	-	-	0.0	62.6	110.7
	1.5 HP	230/3/60	187	253	48.1	245.0	-	-	6.0	68.6	116.7
	3 HP	230/3/60	187	253	48.1	245.0	-	-	9.6	72.2	120.3
	5 HP	230/3/60	187	253	48.1	245.0	-	-	15.2	77.8	125.9
	7.5 HP	230/3/60	187	253	48.1	245.0	-	-	22.0	84.6	132.7
	None	460/3/60	414	506	18.6	125.0	-	-	0.0	24.4	43.0
	1.5 HP	460/3/60	414	506	18.6	125.0	-	-	3.0	27.4	46.0
	3 HP	460/3/60	414	506	18.6	125.0	-	-	4.8	29.2	47.8
	5 HP	460/3/60	414	506	18.6	125.0	-	-	7.6	32.0	50.6
	7.5 HP	460/3/60	414	506	18.6	125.0	-	-	11.0	35.4	54.0
	None	575/3/60	518	633	14.7	100.0	-	-	0.0	19.3	34.0
	1.5 HP	575/3/60	518	633	14.7	100.0	-	-	2.4	21.7	36.4
	3 HP	575/3/60	518	633	14.7	100.0	-	-	3.8	23.2	37.9
	5 HP	575/3/60	518	633	14.7	100.0	-	-	6.1	25.4	40.1
	7.5 HP	575/3/60	518	633	14.7	100.0	-	-	8.8	28.1	42.8

[1]RLA is rated load amps.
[2]LRA is locked rotor amps.
[3]FLA is full load amps.
[4]MCA is minimum circuit amps (for wire sizing) and includes compressor, pump, and control circuit.
[5]MOP is maximum over-current protection.

Table 6 – Water-Cooled & Remote Air-Cooled Condenser Chiller Electrical Data (60 Hz) - continued

Model	Process Pump Size	Rated Voltage	Allowable Power Supply		Compressor Data				Pump Data	Unit Data	
					Comp 1		Comp 2				
			Min	Max	RLA[1]	LRA[2]	RLA[1]	LRA[2]	FLA[3]	MCA[4]	MOP[5]
NQW15 & NQR15	None	230/3/60	187	253	55.8	340.0	-	-	0.0	72.3	128.1
	3 HP	230/3/60	187	253	55.8	340.0	-	-	9.6	81.9	137.7
	5 HP	230/3/60	187	253	55.8	340.0	-	-	15.2	87.5	143.3
	7.5 HP	230/3/60	187	253	55.8	340.0	-	-	22.0	94.3	150.1
	None	460/3/60	414	506	26.9	173.0	-	-	0.0	34.9	61.8
	3 HP	460/3/60	414	506	26.9	173.0	-	-	4.8	39.7	66.6
	5 HP	460/3/60	414	506	26.9	173.0	-	-	7.6	42.5	69.4
	7.5 HP	460/3/60	414	506	26.9	173.0	-	-	11.0	45.9	72.8
	None	575/3/60	518	633	23.7	132.0	-	-	0.0	30.6	54.3
	3 HP	575/3/60	518	633	23.7	132.0	-	-	3.8	34.4	58.1
	5 HP	575/3/60	518	633	23.7	132.0	-	-	6.1	36.7	60.4
	7.5 HP	575/3/60	518	633	23.7	132.0	-	-	8.8	39.4	63.1
NQW20 & NQR20	None	230/3/60	187	253	33.3	239.0	33.3	239.0	0.0	77.4	110.7
	3 HP	230/3/60	187	253	33.3	239.0	33.3	239.0	9.6	87.0	120.3
	5 HP	230/3/60	187	253	33.3	239.0	33.3	239.0	15.2	92.6	125.9
	7.5 HP	230/3/60	187	253	33.3	239.0	33.3	239.0	22.0	99.4	132.7
	10 HP	230/3/60	187	253	33.3	239.0	33.3	239.0	28.0	105.4	138.7
	None	460/3/60	414	506	17.9	125.0	17.9	125.0	0.0	41.5	59.4
	3 HP	460/3/60	414	506	17.9	125.0	17.9	125.0	4.8	46.3	64.2
	5 HP	460/3/60	414	506	17.9	125.0	17.9	125.0	7.6	49.1	67.0
	7.5 HP	460/3/60	414	506	17.9	125.0	17.9	125.0	11.0	52.5	70.4
	10 HP	460/3/60	414	506	17.9	125.0	17.9	125.0	14.0	55.5	73.4
	None	575/3/60	518	633	12.8	80.0	12.8	80.0	0.0	29.8	42.6
	3 HP	575/3/60	518	633	12.8	80.0	12.8	80.0	3.8	33.6	46.4
	5 HP	575/3/60	518	633	12.8	80.0	12.8	80.0	6.1	35.8	48.6
	7.5 HP	575/3/60	518	633	12.8	80.0	12.8	80.0	8.8	38.6	51.4
	10 HP	575/3/60	518	633	12.8	80.0	12.8	80.0	11.2	41.0	53.8
NQW25 & NQR25	None	230/3/60	187	253	51.3	300.0	51.3	300.0	0.0	117.9	169.2
	5 HP	230/3/60	187	253	51.3	300.0	51.3	300.0	15.2	133.1	184.4
	7.5 HP	230/3/60	187	253	51.3	300.0	51.3	300.0	22.0	139.9	191.2
	10 HP	230/3/60	187	253	51.3	300.0	51.3	300.0	28.0	145.9	197.2
	None	460/3/60	414	506	23.1	150.0	23.1	150.0	0.0	53.2	76.3
	5 HP	460/3/60	414	506	23.1	150.0	23.1	150.0	7.6	60.8	83.9
	7.5 HP	460/3/60	414	506	23.1	150.0	23.1	150.0	11.0	64.2	87.3
	10 HP	460/3/60	414	506	23.1	150.0	23.1	150.0	14.0	67.2	90.3
	None	575/3/60	518	633	19.9	109.0	19.9	109.0	0.0	45.7	65.6
	5 HP	575/3/60	518	633	19.9	109.0	19.9	109.0	6.1	51.8	71.7
	7.5 HP	575/3/60	518	633	19.9	109.0	19.9	109.0	8.8	54.5	74.4
	10 HP	575/3/60	518	633	19.9	109.0	19.9	109.0	11.2	56.9	76.8

[1]RLA is rated load amps.
[2]LRA is locked rotor amps.
[3]FLA is full load amps.
[4]MCA is minimum circuit amps (for wire sizing) and includes compressor, pump, and control circuit.
[5]MOP is maximum over-current protection.

Table 6 – Water-Cooled & Remote Air-Cooled Condenser Chiller Electrical Data (60 Hz) - continued

Model	Process Pump Size	Rated Voltage	Allowable Power Supply		Compressor Data				Pump Data	Unit Data	
					Comp 1		Comp 2				
			Min	Max	RLA[1]	LRA[2]	RLA[1]	LRA[2]	FLA[3]	MCA[4]	MOP[5]
NQW30 & NQR30	None	230/3/60	187	253	55.8	340.0	55.8	340.0	0.0	128.1	183.9
	5 HP	230/3/60	187	253	55.8	340.0	55.8	340.0	15.2	143.3	199.1
	7.5 HP	230/3/60	187	253	55.8	340.0	55.8	340.0	22.0	150.1	205.9
	10 HP	230/3/60	187	253	55.8	340.0	55.8	340.0	28.0	156.1	211.9
	None	460/3/60	414	506	26.9	173.0	26.9	173.0	0.0	61.7	88.6
	5 HP	460/3/60	414	506	26.9	173.0	26.9	173.0	7.6	69.3	96.2
	7.5 HP	460/3/60	414	506	26.9	173.0	26.9	173.0	11.0	72.7	99.6
	10 HP	460/3/60	414	506	26.9	173.0	26.9	173.0	14.0	75.7	102.6
	None	575/3/60	518	633	23.7	132.0	23.7	132.0	0.0	54.3	78.0
	5 HP	575/3/60	518	633	23.7	132.0	23.7	132.0	6.1	60.4	84.1
	7.5 HP	575/3/60	518	633	23.7	132.0	23.7	132.0	8.8	63.1	86.8
	10 HP	575/3/60	518	633	23.7	132.0	23.7	132.0	11.2	65.5	89.2
NQW35 & NQR35	None	230/3/60	187	253	55.8	340.0	73.9	505.0	0.0	150.7	202.0
	5 HP	230/3/60	187	253	55.8	340.0	73.9	505.0	15.2	165.9	217.2
	7.5 HP	230/3/60	187	253	55.8	340.0	73.9	505.0	22.0	172.7	224.0
	10 HP	230/3/60	187	253	55.8	340.0	73.9	505.0	28.0	178.7	230.0
	None	460/3/60	414	506	26.9	173.0	30.4	225.0	0.0	66.1	92.1
	5 HP	460/3/60	414	506	26.9	173.0	30.4	225.0	7.6	73.7	99.7
	7.5 HP	460/3/60	414	506	26.9	173.0	30.4	225.0	11.0	77.1	103.1
	10 HP	460/3/60	414	506	26.9	173.0	30.4	225.0	14.0	80.1	106.1
	None	575/3/60	518	633	23.7	132.0	24.6	180.0	0.0	55.4	78.9
	5 HP	575/3/60	518	633	23.7	132.0	24.6	180.0	6.1	61.5	85.0
	7.5 HP	575/3/60	518	633	23.7	132.0	24.6	180.0	8.8	64.2	87.7
	10 HP	575/3/60	518	633	23.7	132.0	24.6	180.0	11.2	66.6	90.1
NQW40 & NQR40	None	230/3/60	187	253	73.9	505.0	73.9	505.0	0.0	168.0	242.7
	5 HP	230/3/60	187	253	73.9	505.0	73.9	505.0	15.2	184.0	257.9
	7.5 HP	230/3/60	187	253	73.9	505.0	73.9	505.0	22.0	190.8	264.7
	10 HP	230/3/60	187	253	73.9	505.0	73.9	505.0	28.0	196.8	270.7
	None	460/3/60	414	506	30.4	225.0	30.4	225.0	0.0	69.6	100.0
	5 HP	460/3/60	414	506	30.4	225.0	30.4	225.0	7.6	77.2	107.6
	7.5 HP	460/3/60	414	506	30.4	225.0	30.4	225.0	11.0	80.6	111.0
	10 HP	460/3/60	414	506	30.4	225.0	30.4	225.0	14.0	83.6	114.0
	None	575/3/60	518	633	24.6	180.0	24.6	180.0	0.0	56.3	80.9
	5 HP	575/3/60	518	633	24.6	180.0	24.6	180.0	6.1	62.4	87.0
	7.5 HP	575/3/60	518	633	24.6	180.0	24.6	180.0	8.8	65.1	89.7
	10 HP	575/3/60	518	633	24.6	180.0	24.6	180.0	11.2	67.5	92.1

[1]RLA is rated load amps.
[2]LRA is locked rotor amps.
[3]FLA is full load amps.
[4]MCA is minimum circuit amps (for wire sizing) and includes compressor, pump, and control circuit.
[5]MOP is maximum over-current protection.

Table 7 – Remote Air-Cooled Condenser Electrical Data (60 Hz)

Model	Chiller Model Used With	Main Power (3-phase, 60 Hz)			Variable-Speed Fan (1-phase)			Constant-Speed Fans (3-phase)			Total FLA[2]	MCA[3]	MOP[4]
		Rated	Allowable		Qty	Motor (hp)	FLA[1] Each	Qty	Motor (hp)	FLA[1] Each			
			Min	Max									
KCM009	NQR05	230	187	253	1	½	3.6				2.3	2.9	15
		460	414	508	1	½	1.7				1.2	1.4	15
		575	518	632	1	½	1.4				0.9	1.1	15
KCM011	NQR08	230	187	253	1	½	3.6				2.3	2.9	15
		460	414	508	1	½	1.7				1.2	1.4	15
		575	518	632	1	½	1.4				0.9	1.1	15
KCM014	NQR10	230	187	253	1	½	3.6	1	¾	2.3	4.6	5.2	15
		460	414	508	1	½	1.7	1	¾	1.2	2.3	2.6	15
		575	518	632	1	½	1.4	1	¾	0.9	1.8	2.0	15
KCL023	NQR15	230	187	253	1	½	3.6	1	2	6.6	13.2	16.0	20
		460	414	508	1	½	1.7	1	2	3.1	6.2	7.0	15
		575	518	632	1	½	1.4	1	2	2.5	5.0	5.6	15
KCL030	NQR20	230	187	253	1	½	3.6	1	2	6.6	13.2	16.0	20
		460	414	508	1	½	1.7	1	2	3.1	6.2	7.0	15
		575	518	632	1	½	1.4	1	2	2.5	5.0	5.6	15
KCL037	NQR25	230	187	253	1	½	3.6	1	2	6.6	13.2	16.0	20
		460	414	508	1	½	1.7	1	2	3.1	6.2	7.0	15
		575	518	632	1	½	1.4	1	2	2.5	5.0	5.6	15
KCL045	NQR30	230	187	253	1	½	3.6	2	2	6.6	19.8	21.5	25
		460	414	508	1	½	1.7	2	2	3.1	9.3	10.1	15
		575	518	632	1	½	1.4	2	2	2.5	7.5	8.1	15
KCL054	NQR35	230	187	253	1	½	3.6	2	2	6.6	19.8	21.5	25
		460	414	508	1	½	1.7	2	2	3.1	9.3	10.1	15
		575	518	632	1	½	1.4	2	2	2.5	7.5	8.1	15
KCL056	NQR40	230	187	253	1	½	3.6	2	2	6.6	19.8	21.5	25
		460	414	508	1	½	1.7	2	2	3.1	9.3	10.1	15
		575	518	632	1	½	1.4	2	2	2.5	7.5	8.1	15

[1]FLA is Full Load Amps.
[2]Total FLA as provided by the remote condenser manufacture.
[3]MCA is minimum circuit amps (for wire sizing) as provided by the remote condenser manufacturer.
[4]MOP is maximum over-current protection as provided by the remote condenser manufacturer.

Performance Data

Table 8 – NQA Series Air-Cooled Condenser Chiller Cooling Capacities (60 Hz)

LCWT[1] (°F)	Model	Condenser Entering Air Temperature (°F)											
		85			90			95			100		
		Cap[2]	Input kW[3]	Cooler Flow (gpm)	Cap[2]	Input kW[3]	Cooler Flow (gpm)	Cap[2]	Input kW[3]	Cooler Flow (gpm)	Cap[2]	Input kW[3]	Cooler Flow (gpm)
20	NQA04	2.8	3.23	7	2.7	3.44	7	2.6	3.69	7	2.5	3.95	7
	NQA05	3.1	4.34	8	3.0	4.58	8	2.9	4.84	8	2.7	5.11	7
	NQA08	4.8	5.66	13	4.6	5.98	12	4.5	6.33	12	4.4	6.70	12
	NQA10	6.8	8.77	18	6.6	9.26	18	6.4	9.83	17	6.1	10.44	16
	NQA13	7.8	10.18	21	7.5	10.74	20	7.3	11.36	19	7.1	12.01	19
	NQA15	9.2	11.52	24	8.9	12.13	24	8.6	12.82	23	8.4	13.56	22
	NQA20	12.5	15.66	33	12.0	16.62	32	11.6	17.77	31	11.1	19.03	29
	NQA25	15.7	19.85	42	15.2	20.96	40	14.8	22.17	39	14.3	23.45	38
	NQA30	18.4	23.11	49	17.9	24.36	47	17.3	25.75	46	16.8	27.24	45
25	NQA04	3.0	3.26	8	3.0	3.47	8	2.9	3.72	7	2.8	3.98	7
	NQA05	3.4	4.36	9	3.3	4.61	9	3.2	4.87	8	3.0	5.14	8
	NQA08	5.2	5.73	14	5.1	6.05	13	5.0	6.40	13	4.8	6.77	13
	NQA10	7.5	8.91	20	7.3	9.43	19	7.0	10.00	18	6.8	10.61	18
	NQA13	8.5	10.41	22	8.3	10.99	22	8.0	11.62	21	7.7	12.28	20
	NQA15	10.1	11.74	26	9.8	12.36	26	9.5	13.06	25	9.2	13.81	24
	NQA20	13.8	15.94	36	13.3	16.90	35	12.8	18.03	33	12.3	19.27	32
	NQA25	17.2	20.27	45	16.7	21.40	44	16.2	22.63	42	15.7	23.92	41
	NQA30	20.2	23.57	53	19.6	24.84	51	19.1	26.24	50	18.4	27.73	48
30	NQA04	3.3	3.29	9	3.2	3.51	8	3.1	3.75	8	3.0	4.01	8
	NQA05	3.8	4.40	10	3.6	4.63	9	3.5	4.90	9	3.4	5.17	9
	NQA08	5.7	5.80	15	5.6	6.13	14	5.5	6.48	14	5.3	6.85	14
	NQA10	8.2	9.09	21	8.0	9.59	20	7.7	10.16	20	7.4	10.77	19
	NQA13	9.3	10.67	24	9.0	11.23	23	8.8	11.86	22	8.5	12.54	22
	NQA15	11.0	11.99	28	10.7	12.60	27	10.4	13.30	27	10.1	14.05	26
	NQA20	15.1	16.26	39	14.6	17.19	37	14.1	18.30	36	13.6	19.53	35
	NQA25	18.8	20.73	48	18.3	21.84	47	17.8	23.08	45	17.2	24.39	44
	NQA30	22.1	24.07	57	21.5	25.32	55	20.9	26.73	53	20.2	28.23	52
35	NQA04	3.6	3.32	9	3.5	3.54	9	3.4	3.79	9	3.3	4.05	8
	NQA05	4.1	4.42	10	4.0	4.67	10	3.9	4.93	10	3.7	5.21	9
	NQA08	6.3	5.89	16	6.1	6.21	15	6.0	6.56	15	5.8	6.94	15
	NQA10	9.0	9.25	23	8.7	9.77	22	8.4	10.34	21	8.2	10.95	21
	NQA13	10.1	10.90	25	9.8	11.49	25	9.5	12.13	24	9.2	12.82	23
	NQA15	12.0	12.23	30	11.7	12.86	30	11.4	13.56	29	11.0	14.32	28
	NQA20	16.5	16.55	42	16.0	17.51	40	15.4	18.62	39	14.9	19.84	37
	NQA25	20.5	21.17	51	19.9	22.31	50	19.4	23.56	49	18.8	24.89	47
	NQA30	24.1	24.57	61	23.5	25.85	59	22.8	27.26	57	22.1	28.78	56

[1]LCWT = Leaving Coolant Temperature.

[2]Cap = Capacity in tons of refrigeration based on a coolant temperature rise of 10°F, a cooler fouling factor of 0.0001 ft^2 • hr • °F/Btu, the use of an appropriate ethylene glycol solution where needed, R-410A refrigerant, and operating at sea level. For higher elevations capacity is reduced by applying the following capacity factors for elevations above sea level: 1,000 feet elevation = 0.98, 2,000 feet elevation = 0.95, 3,000 feet elevation = 0.93, 4,000 feet elevation = 0.91, 5,000 feet elevation = 0.89, 6,000 feet elevation = 0.87, 7,000 feet elevation = 0.85. 8,000 feet elevation = 0.81, more than 8,000 feet elevation consult factory.

[3]kW = Compressors and condenser fan motors input power at rated voltage.

Table 8 – NQA Series Air-Cooled Condenser Chiller Cooling Capacities (60 Hz) – Continued

LCWT[1] (°F)	Model	Condenser Entering Air Temperature (°F)											
		85			90			95			100		
		Cap[2]	Input kW[3]	Cooler Flow (gpm)	Cap[2]	Input kW[3]	Cooler Flow (gpm)	Cap[2]	Input kW[3]	Cooler Flow (gpm)	Cap[2]	Input kW[3]	Cooler Flow (gpm)
40	NQA04	4.1	3.39	10	4.0	3.60	10	3.9	3.85	9	3.7	4.11	9
	NQA05	4.7	4.47	11	4.6	4.71	11	4.4	4.98	11	4.3	5.26	10
	NQA08	7.1	6.03	17	7.0	6.34	17	6.8	6.70	16	6.6	7.08	16
	NQA10	10.2	9.53	24	9.9	10.05	24	9.5	10.63	23	9.2	11.24	22
	NQA13	11.3	11.28	27	11.0	11.88	26	10.7	12.53	25	10.3	13.22	25
	NQA15	13.6	12.62	33	13.2	13.26	32	12.8	13.96	31	12.4	14.72	30
	NQA20	18.6	17.02	44	18.0	17.99	43	17.4	19.11	42	16.7	20.31	40
	NQA25	22.9	21.84	55	22.3	23.00	53	21.6	24.26	52	20.9	25.60	50
	NQA30	27.0	25.35	65	26.3	26.63	63	25.5	28.06	61	24.7	29.57	59
45	NQA04	4.4	3.43	11	4.3	3.65	10	4.2	3.91	10	4.1	4.16	10
	NQA05	5.1	4.50	12	5.0	4.75	12	4.8	5.01	12	4.7	5.29	11
	NQA08	7.8	6.12	19	7.6	6.44	18	7.4	6.80	18	7.2	7.19	17
	NQA10	11.0	9.75	26	10.7	10.28	26	10.4	10.85	25	10.0	11.47	24
	NQA13	12.3	11.59	29	11.9	12.19	29	11.5	12.85	28	11.2	13.55	27
	NQA15	14.7	12.95	35	14.3	13.59	34	13.9	14.29	33	13.4	15.05	32
	NQA20	20.1	17.42	48	19.6	18.40	47	18.9	19.51	45	18.2	20.72	44
	NQA25	24.9	22.41	60	24.2	23.56	58	23.5	24.83	56	22.7	26.18	54
	NQA30	29.4	26.02	70	28.6	27.31	68	27.7	28.73	66	26.8	30.26	64
50	NQA04	4.8	3.49	12	4.7	3.70	11	4.5	3.97	11	4.4	4.23	11
	NQA05	5.6	4.53	13	5.4	4.79	13	5.3	5.05	13	5.1	5.33	12
	NQA08	8.5	6.23	20	8.3	6.55	20	8.0	6.91	19	7.8	7.29	19
	NQA10	11.9	9.99	29	11.6	10.52	28	11.2	11.10	27	10.9	11.72	26
	NQA13	13.2	11.92	32	12.9	12.53	31	12.5	13.19	30	12.1	13.90	29
	NQA15	15.9	13.32	38	15.5	13.95	37	15.0	14.66	36	14.6	15.42	35
	NQA20	21.8	17.84	52	21.2	18.83	51	20.5	19.95	49	19.8	21.16	48
	NQA25	26.9	23.02	65	26.2	24.17	63	25.4	25.44	61	24.6	26.81	59
	NQA30	31.8	26.77	76	30.9	28.05	74	30.0	29.49	72	29.0	31.02	70
55	NQA04	4.9	3.55	12	5.0	3.79	12	4.9	4.03	12	4.8	4.30	11
	NQA05	6.1	4.57	15	5.9	4.83	14	5.7	5.09	14	5.5	5.38	13
	NQA08	9.2	6.34	22	9.0	6.66	22	8.7	7.02	21	8.5	7.40	20
	NQA10	12.9	10.22	31	12.5	10.80	30	12.1	11.36	29	11.7	11.99	28
	NQA13	14.3	12.28	34	13.9	12.89	33	13.4	13.56	32	13.0	14.27	31
	NQA15	17.2	13.69	41	16.7	14.38	40	16.2	15.07	39	15.7	15.83	38
	NQA20	23.6	18.23	57	22.9	19.33	55	22.2	20.46	53	21.4	21.64	51
	NQA25	29.1	23.60	70	28.3	24.85	68	27.4	26.10	66	26.6	27.47	64
	NQA30	34.3	27.54	82	33.3	28.93	80	32.4	30.37	78	31.3	31.86	75

[1]LCWT = Leaving Coolant Temperature.

[2]Cap = Capacity in tons of refrigeration based on a coolant temperature rise of 10°F, a cooler fouling factor of 0.0001 ft^2 • hr • °F/Btu, the use of an appropriate ethylene glycol solution where needed, R-410A refrigerant, and operating at sea level. For higher elevations capacity is reduced by applying the following capacity factors for elevations above sea level: 1,000 feet elevation = 0.98, 2,000 feet elevation = 0.95, 3,000 feet elevation = 0.93, 4,000 feet elevation = 0.91, 5,000 feet elevation = 0.89, 6,000 feet elevation = 0.87, 7,000 feet elevation = 0.85. 8,000 feet elevation = 0.81, more than 8,000 feet elevation consult factory.

[3]kW = Compressors and condenser fan motors input power at rated voltage.

Table 8 – NQA Series Air-Cooled Condenser Chiller Cooling Capacities (60 Hz) – Continued

LCWT[1] (°F)	Model	Condenser Entering Air Temperature (°F)											
		85			90			95			100		
		Cap[2]	Input kW[3]	Cooler Flow (gpm)	Cap[2]	Input kW[3]	Cooler Flow (gpm)	Cap[2]	Input kW[3]	Cooler Flow (gpm)	Cap[2]	Input kW[3]	Cooler Flow (gpm)
60	NQA04	4.9	3.63	12	5.0	3.86	12	5.1	4.11	12	5.1	4.38	12
	NQA05	6.3	4.61	15	6.4	4.87	15	6.2	5.13	15	6.0	5.42	14
	NQA08	10.0	6.45	24	9.7	6.77	23	9.5	7.13	23	9.2	7.55	22
	NQA10	13.9	10.50	33	13.5	11.08	32	13.1	11.67	31	12.7	12.27	30
	NQA13	15.4	12.67	37	14.9	13.29	36	14.4	13.96	35	13.9	14.68	33
	NQA15	18.2	14.14	44	18.0	14.83	43	17.4	15.55	42	16.9	16.31	41
	NQA20	25.1	18.70	60	24.7	19.82	59	23.9	20.97	57	23.1	22.20	56
	NQA25	30.2	24.29	73	30.5	25.55	73	29.5	26.85	71	28.6	28.19	69
	NQA30	36.9	28.46	89	35.9	29.86	86	34.8	31.30	84	33.7	32.84	81
65	NQA04	4.8	3.71	11	4.9	3.94	12	5.0	4.19	12	5.1	4.46	12
	NQA05	6.2	4.65	15	6.3	4.90	15	6.4	5.17	15	6.5	5.46	16
	NQA08	10.8	6.57	26	10.5	6.90	25	10.2	7.28	25	9.9	7.64	24
	NQA10	14.9	10.80	36	14.5	11.38	35	14.0	11.97	34	13.6	12.60	33
	NQA13	15.8	13.09	38	16.0	13.73	38	15.5	14.39	37	14.9	15.11	36
	NQA15	18.0	14.64	43	18.3	15.34	44	18.6	16.05	45	18.1	16.82	44
	NQA20	24.7	19.20	59	25.2	20.35	61	25.6	21.52	62	24.9	22.76	60
	NQA25	29.8	25.03	72	30.4	26.31	73	30.9	27.61	74	30.7	28.99	74
	NQA30	39.6	29.49	95	38.5	30.90	92	37.3	32.34	90	36.1	33.88	87
70	NQA04	4.7	3.80	11	4.8	4.02	12	4.9	4.28	12	5.0	4.56	12
	NQA05	6.1	4.70	15	6.2	4.95	15	6.3	5.20	15	6.4	5.50	15
	NQA08	11.0	6.69	26	11.4	7.01	27	11.1	7.39	27	10.7	7.79	26
	NQA10	15.3	11.15	37	15.5	11.72	37	15.1	12.28	36	14.6	12.93	35
	NQA13	15.6	13.53	37	15.8	14.19	38	16.0	14.87	38	16.0	15.60	38
	NQA15	17.7	15.23	43	18.1	15.90	43	18.4	16.61	44	18.6	17.38	45
	NQA20	24.4	19.79	59	24.9	20.92	60	25.3	22.07	61	25.6	23.37	62
	NQA25	29.4	25.90	71	30.0	27.13	72	30.4	28.37	73	30.8	29.82	74
	NQA30	40.3	30.69	97	41.1	32.05	99	39.9	33.49	96	38.7	35.04	93
75	NQA04	4.6	3.90	11	4.7	4.13	11	4.8	4.38	12	4.9	4.66	12
	NQA05	6.0	4.73	14	6.1	4.98	15	6.2	5.26	15	6.3	5.54	15
	NQA08	10.8	6.80	26	11.1	7.14	27	11.4	7.50	27	11.6	7.92	28
	NQA10	15.0	11.51	36	15.3	12.03	37	15.6	12.67	37	15.6	13.28	37
	NQA13	15.4	14.05	37	15.6	14.64	37	15.8	15.38	38	15.9	16.11	38
	NQA15	17.4	15.80	42	17.8	16.47	43	18.1	17.24	44	18.3	17.97	44
	NQA20	24.0	20.29	58	24.5	21.45	59	24.9	22.75	60	25.2	24.00	61
	NQA25	29.0	26.67	70	29.5	27.91	71	30.0	29.32	72	30.4	30.67	73
	NQA30	39.7	31.87	95	40.5	33.23	97	41.2	34.78	99	41.3	36.28	99

[1]LCWT = Leaving Coolant Temperature.

[2]Cap = Capacity in tons of refrigeration based on a coolant temperature rise of 10°F, a cooler fouling factor of 0.0001 ft^2 • hr • °F/Btu, the use of an appropriate ethylene glycol solution where needed, R-410A refrigerant, and operating at sea level. For higher elevations capacity is reduced by applying the following capacity factors for elevations above sea level: 1,000 feet elevation = 0.98, 2,000 feet elevation = 0.95, 3,000 feet elevation = 0.93, 4,000 feet elevation = 0.91, 5,000 feet elevation = 0.89, 6,000 feet elevation = 0.87, 7,000 feet elevation = 0.85. 8,000 feet elevation = 0.81, more than 8,000 feet elevation consult factory.

[3]kW = Compressors and condenser fan motors input power at rated voltage.

Table 8 – NQA Series Air-Cooled Condenser Chiller Cooling Capacities (60 Hz) – Continued

LCWT[1] (°F)	Model	Condenser Entering Air Temperature (°F)											
		85			90			95			100		
		Cap[2]	Input kW[3]	Cooler Flow (gpm)	Cap[2]	Input kW[3]	Cooler Flow (gpm)	Cap[2]	Input kW[3]	Cooler Flow (gpm)	Cap[2]	Input kW[3]	Cooler Flow (gpm)
80	NQA04	4.5	4.02	11	4.6	4.25	11	4.7	4.50	11	4.8	4.77	12
	NQA05	5.9	4.78	14	6.0	5.03	14	6.1	5.30	15	6.2	5.60	15
	NQA08	10.5	6.93	25	10.9	7.27	26	11.2	7.64	27	11.5	8.02	28
	NQA10	14.8	11.87	36	15.1	12.42	36	15.3	13.01	37	15.5	13.69	37
	NQA13	15.1	14.55	36	15.4	15.19	37	15.6	15.94	37	15.7	16.67	38
	NQA15	17.1	16.54	41	17.5	17.19	42	17.8	17.88	43	18.0	18.71	43
	NQA20	23.6	20.98	57	24.1	22.13	58	24.5	23.35	59	24.8	24.73	60
	NQA25	28.5	27.70	69	29.1	28.89	70	29.5	30.17	71	29.9	31.68	72
	NQA30	39.0	33.38	94	39.9	34.69	96	40.5	36.10	97	41.1	37.76	99

[1]LCWT = Leaving Coolant Temperature.

[2]Cap = Capacity in tons of refrigeration based on a coolant temperature rise of 10°F, a cooler fouling factor of 0.0001 ft^2 • hr • °F/Btu, the use of an appropriate ethylene glycol solution where needed, R-410A refrigerant, and operating at sea level. For higher elevations capacity is reduced by applying the following capacity factors for elevations above sea level: 1,000 feet elevation = 0.98, 2,000 feet elevation = 0.95, 3,000 feet elevation = 0.93, 4,000 feet elevation = 0.91, 5,000 feet elevation = 0.89, 6,000 feet elevation = 0.87, 7,000 feet elevation = 0.85. 8,000 feet elevation = 0.81, more than 8,000 feet elevation consult factory.

[3]kW = Compressors and condenser fan motors input power at rated voltage.

Table 9 – NQW Series Water-Cooled Condenser Chiller Cooling Capacities (60 Hz)

LCWT[1] (°F)	Model	Condenser Entering Water Temperature (°F)											
		80			85			90			95		
		Cap[2]	Input kW[3]	Cooler Flow (gpm)	Cap[2]	Input kW[3]	Cooler Flow (gpm)	Cap[2]	Input kW[3]	Cooler Flow (gpm)	Cap[2]	Input kW[3]	Cooler Flow (gpm)
20	NQW05	3.1	4.22	8	3.0	4.46	8	2.9	4.72	8	2.8	4.99	7
	NQW08	4.8	5.69	13	4.6	6.02	12	4.5	6.37	12	4.4	6.75	12
	NQW10	7.0	8.25	19	6.8	8.74	18	6.6	9.28	18	6.3	9.86	17
	NQW15	9.5	10.82	25	9.2	11.39	25	9.0	12.04	24	8.7	12.73	23
	NQW20	13.1	14.55	35	12.6	15.40	34	12.1	16.42	32	11.7	17.56	31
	NQW25	16.1	18.55	43	15.8	19.60	42	15.3	20.73	41	14.9	21.93	40
	NQW30	19.0	21.64	50	18.5	22.83	49	18.0	24.12	48	17.4	25.51	46
	NQW35	21.6	24.37	57	21.0	25.61	56	20.3	27.03	54	19.7	28.59	52
	NQW40	24.1	27.43	64	23.4	28.85	62	22.7	30.44	60	22.0	32.21	58
25	NQW05	3.5	4.22	9	3.4	4.46	9	3.3	4.72	8	3.1	4.99	8
	NQW08	5.2	5.74	14	5.1	6.06	13	5.0	6.42	13	4.8	6.79	13
	NQW10	7.8	8.33	20	7.5	8.81	20	7.3	9.36	19	7.0	9.93	18
	NQW15	10.4	10.94	27	10.2	11.52	27	9.9	12.16	26	9.6	12.85	25
	NQW20	14.4	14.69	38	14.0	15.52	36	13.5	16.52	35	13.0	17.63	34
	NQW25	17.8	18.78	46	17.4	19.83	45	16.9	20.97	44	16.4	22.18	43
	NQW30	20.9	21.91	55	20.4	23.07	53	19.8	24.38	52	19.3	25.76	50
	NQW35	23.9	24.69	62	23.2	25.92	61	22.5	27.31	59	21.8	28.84	57
	NQW40	26.7	27.85	70	25.9	29.21	68	25.1	30.77	66	24.4	32.49	63
30	NQW05	3.9	4.22	10	3.7	4.45	10	3.6	4.71	9	3.5	4.98	9
	NQW08	5.8	5.79	15	5.6	6.11	14	5.5	6.47	14	5.3	6.84	14
	NQW10	8.6	8.42	22	8.3	8.89	21	8.1	9.42	21	7.8	9.99	20
	NQW15	11.5	11.07	29	11.2	11.65	29	10.9	12.29	28	10.6	12.98	27
	NQW20	15.9	14.84	41	15.4	15.65	39	14.9	16.63	38	14.4	17.72	37
	NQW25	19.5	19.02	50	19.1	20.06	49	18.6	21.20	47	18.0	22.42	46
	NQW30	23.0	22.18	59	22.4	23.33	57	21.8	24.62	56	21.2	26.01	54
	NQW35	26.4	25.07	68	25.7	26.27	66	24.9	27.65	64	24.2	29.15	62
	NQW40	29.5	28.29	75	28.6	29.63	73	27.8	31.16	71	27.0	32.85	69
35	NQW05	4.2	4.20	11	4.1	4.44	10	4.0	4.70	10	3.9	4.97	10
	NQW08	6.3	5.84	16	6.1	6.17	15	6.0	6.52	15	5.8	6.90	15
	NQW10	9.4	8.49	24	9.1	8.97	23	8.9	9.51	22	8.6	10.08	22
	NQW15	12.6	11.21	32	12.3	11.78	31	11.9	12.42	30	11.6	13.11	29
	NQW20	17.4	14.99	44	16.9	15.80	43	16.4	16.76	41	15.8	17.83	40
	NQW25	21.4	19.25	54	20.9	20.30	53	20.3	21.45	51	19.8	22.67	50
	NQW30	25.2	22.45	63	24.6	23.61	62	24.0	24.90	60	23.3	26.28	59
	NQW35	29.0	25.44	73	28.2	26.67	71	27.4	28.04	69	26.6	29.53	67
	NQW40	32.4	28.73	82	31.5	30.10	79	30.6	31.63	77	29.7	33.30	75

[1]LCWT = Leaving Coolant Temperature.

[2]Cap = Capacity in tons of refrigeration based on a coolant temperature rise of 10°F (5.6°C), cooler fouling factor of 0.0001 ft^2 • hr • °F/Btu, condenser fouling factor of 0.00025 ft^2 • hr • °F/Btu, subcooling of 10°F, the use of an appropriate ethylene glycol solution where needed, and use of R-410A refrigerant.

[3]kW = Compressor motor(s) input power at rated voltage.

Table 9 – NQW Series Water-Cooled Condenser Chiller Cooling Capacities (60 Hz) – Continued

LCWT[1] (°F)	Model	Condenser Entering Water Temperature (°F)											
		80			85			90			95		
		Cap[2]	Input kW[3]	Cooler Flow (gpm)	Cap[2]	Input kW[3]	Cooler Flow (gpm)	Cap[2]	Input kW[3]	Cooler Flow (gpm)	Cap[2]	Input kW[3]	Cooler Flow (gpm)
40	NQW05	4.9	4.19	12	4.7	4.43	11	4.6	4.68	11	4.4	4.95	11
	NQW08	7.2	5.93	17	7.0	6.26	17	6.8	6.61	16	6.6	6.99	16
	NQW10	10.7	8.63	26	10.4	9.11	25	10.1	9.64	24	9.8	10.21	23
	NQW15	14.3	11.44	34	13.9	12.01	33	13.5	12.64	32	13.2	13.32	31
	NQW20	19.7	15.21	47	19.1	16.01	46	18.6	16.96	44	18.0	18.01	43
	NQW25	24.2	19.61	58	23.5	20.66	56	22.9	21.81	55	22.3	23.03	53
	NQW30	28.5	22.90	68	27.8	24.05	66	27.0	25.32	65	26.3	26.69	63
	NQW35	33.0	26.01	79	32.1	27.25	77	31.2	28.63	75	30.2	30.12	72
	NQW40	36.7	29.38	88	35.7	30.78	85	34.7	32.31	83	33.6	33.98	80
45	NQW05	5.3	4.18	13	5.2	4.42	12	5.0	4.67	12	4.9	4.94	12
	NQW08	7.9	5.99	19	7.7	6.32	18	7.5	6.68	18	7.2	7.06	17
	NQW10	11.7	8.75	28	11.4	9.22	27	11.0	9.75	26	10.7	10.32	26
	NQW15	15.6	11.63	37	15.2	12.19	36	14.8	12.81	35	14.4	13.50	34
	NQW20	21.5	15.39	51	20.9	16.18	50	20.3	17.13	49	19.7	18.17	47
	NQW25	26.4	19.91	63	25.7	20.95	62	25.1	22.09	60	24.3	23.32	58
	NQW30	31.1	23.30	75	30.4	24.43	73	29.6	25.69	71	28.7	27.06	69
	NQW35	36.2	26.42	87	35.2	27.70	84	34.2	29.09	82	33.2	30.59	80
	NQW40	40.3	29.88	96	39.2	31.31	94	38.0	32.87	91	36.9	34.55	88
50	NQW05	5.8	4.17	14	5.7	4.41	14	5.5	4.66	13	5.3	4.93	13
	NQW08	8.6	6.06	21	8.4	6.39	20	8.1	6.75	20	7.9	7.12	19
	NQW10	12.7	8.86	31	12.4	9.35	30	12.0	9.87	29	11.7	10.43	28
	NQW15	16.9	11.86	41	16.5	12.41	40	16.1	13.03	39	15.7	13.70	38
	NQW20	23.3	15.56	56	22.8	16.36	55	22.2	17.31	53	21.5	18.35	52
	NQW25	28.8	20.25	69	28.1	21.28	67	27.3	22.42	65	26.5	23.63	64
	NQW30	33.8	23.77	81	33.0	24.88	79	32.2	26.13	77	31.3	27.48	75
	NQW35	39.6	26.84	95	38.5	28.15	92	37.4	29.57	90	36.3	31.10	87
	NQW40	44.0	30.39	105	42.8	31.86	103	41.6	33.45	100	40.4	35.15	97
55	NQW05	6.1	4.16	15	6.2	4.40	15	6.0	4.65	14	5.8	4.91	14
	NQW08	9.4	6.13	23	9.1	6.46	22	8.9	6.82	21	8.6	7.20	21
	NQW10	13.8	9.01	33	13.4	9.48	32	13.1	10.01	31	12.7	10.57	30
	NQW15	17.2	12.13	41	17.7	12.67	43	17.5	13.28	42	17.0	13.94	41
	NQW20	23.6	15.74	57	24.4	16.55	58	24.1	17.50	58	23.4	18.54	56
	NQW25	28.5	20.63	68	29.4	21.65	70	29.7	22.77	71	28.9	23.98	69
	NQW30	36.7	24.32	88	35.9	25.41	86	35.0	26.65	84	34.0	27.98	82
	NQW35	38.7	27.22	93	40.0	28.58	96	40.8	30.05	98	39.6	31.61	95
	NQW40	48.0	30.87	115	46.7	32.40	112	45.4	34.03	109	44.1	35.77	106

[1]LCWT = Leaving Coolant Temperature.

[2]Cap = Capacity in tons of refrigeration based on a coolant temperature rise of 10°F (5.6°C), cooler fouling factor of 0.0001 ft^2 • hr • °F/Btu, condenser fouling factor of 0.00025 ft^2 • hr • °F/Btu, subcooling of 10°F, the use of an appropriate ethylene glycol solution where needed, and use of R-410A refrigerant.

[3]kW = Compressor motor(s) input power at rated voltage.

Table 9 – NQW Series Water-Cooled Condenser Chiller Cooling Capacities (60 Hz) – Continued

LCWT[1] (°F)	Model	Condenser Entering Water Temperature (°F)											
		80			85			90			95		
		Cap[2]	Input kW[3]	Cooler Flow (gpm)	Cap[2]	Input kW[3]	Cooler Flow (gpm)	Cap[2]	Input kW[3]	Cooler Flow (gpm)	Cap[2]	Input kW[3]	Cooler Flow (gpm)
60	NQW05	5.9	4.16	14	6.1	4.39	15	6.3	4.63	15	6.4	4.90	15
	NQW08	10.2	6.20	25	9.9	6.53	24	9.7	6.89	23	9.4	7.27	23
	NQW10	14.6	9.16	35	14.6	9.64	35	14.2	10.16	34	13.8	10.72	33
	NQW15	16.8	12.44	40	17.4	12.97	42	17.9	13.58	43	18.3	14.23	44
	NQW20	23.1	15.92	55	23.9	16.74	57	24.5	17.70	59	25.1	18.75	60
	NQW25	27.9	21.04	67	28.8	22.05	69	29.6	23.17	71	30.2	24.36	73
	NQW30	38.2	24.96	92	38.8	26.04	93	37.8	27.25	91	36.8	28.57	88
	NQW35	37.8	27.57	91	39.1	28.99	94	40.3	30.51	97	41.3	32.11	99
	NQW40	52.2	31.32	126	50.8	32.91	122	49.4	34.61	119	48.0	36.40	115
65	NQW05	5.8	4.15	14	6.0	4.38	14	6.2	4.62	15	6.3	4.88	15
	NQW08	10.9	6.28	26	10.8	6.61	26	10.5	6.96	25	10.2	7.34	24
	NQW10	14.3	9.35	34	14.8	9.81	35	15.2	10.33	36	14.9	10.88	36
	NQW15	16.4	12.80	39	17.0	13.32	41	17.5	13.92	42	17.9	14.56	43
	NQW20	22.5	16.10	54	23.3	16.94	56	24.0	17.92	58	24.7	18.97	59
	NQW25	27.2	21.51	65	28.1	22.50	68	29.0	23.60	70	29.7	24.79	71
	NQW30	37.2	25.72	89	38.5	26.76	93	39.7	27.95	95	39.8	29.26	96
	NQW35	36.7	27.90	88	38.1	29.36	92	39.4	30.94	95	40.5	32.61	97
	NQW40	56.1	31.75	135	55.2	33.40	133	53.7	35.16	129	52.1	37.01	125
70	NQW05	5.6	4.13	14	5.9	4.36	14	6.0	4.61	15	6.2	4.87	15
	NQW08	10.6	6.34	25	11.0	6.68	26	11.4	7.03	27	11.0	7.41	27
	NQW10	13.9	9.55	33	14.4	10.01	35	14.9	10.52	36	15.2	11.07	37
	NQW15	15.9	13.20	38	16.5	13.73	40	17.1	14.31	41	17.6	14.95	42
	NQW20	21.8	16.29	52	22.7	17.15	55	23.5	18.14	56	24.1	19.22	58
	NQW25	26.4	21.99	63	27.4	23.00	66	28.3	24.09	68	29.1	25.26	70
	NQW30	36.0	26.54	86	37.6	27.60	90	38.8	28.77	93	39.9	30.05	96
	NQW35	35.6	28.12	86	37.1	29.71	89	38.4	31.35	92	39.6	33.07	95
	NQW40	54.4	32.06	131	56.7	33.86	136	58.1	35.69	140	56.5	37.61	136
75	NQW05	5.5	4.13	13	5.7	4.35	14	5.9	4.59	14	6.0	4.85	15
	NQW08	10.3	6.42	25	10.7	6.75	26	11.1	7.11	27	11.4	7.48	27
	NQW10	13.5	9.76	32	14.0	10.23	34	14.5	10.74	35	14.9	11.28	36
	NQW15	15.4	13.70	37	16.1	14.21	39	16.7	14.78	40	17.2	15.40	41
	NQW20	21.0	16.48	51	22.0	17.37	53	22.9	18.38	55	23.6	19.48	57
	NQW25	25.6	22.61	62	26.7	23.56	64	27.6	24.64	66	28.5	25.79	68
	NQW30	34.9	27.57	84	36.4	28.57	88	37.8	29.72	91	39.0	30.97	94
	NQW35	34.4	28.37	83	36.0	30.01	87	37.4	31.73	90	38.6	33.51	93
	NQW40	52.7	32.43	127	55.0	34.28	132	57.1	36.20	137	58.8	38.18	142

[1]LCWT = Leaving Coolant Temperature.

[2]Cap = Capacity in tons of refrigeration based on a coolant temperature rise of 10°F (5.6°C), cooler fouling factor of 0.0001 ft^2 • hr • °F/Btu, condenser fouling factor of 0.00025 ft^2 • hr • °F/Btu, subcooling of 10°F, the use of an appropriate ethylene glycol solution where needed, and use of R-410A refrigerant.

[3]kW = Compressor motor(s) input power at rated voltage.

Table 9 – NQW Series Water-Cooled Condenser Chiller Cooling Capacities (60 Hz) – Continued

LCWT[1] (°F)	Model	Condenser Entering Water Temperature (°F)											
		80			85			90			95		
		Cap[2]	Input kW[3]	Cooler Flow (gpm)	Cap[2]	Input kW[3]	Cooler Flow (gpm)	Cap[2]	Input kW[3]	Cooler Flow (gpm)	Cap[2]	Input kW[3]	Cooler Flow (gpm)
80	NQW05	5.3	4.13	13	5.5	4.34	13	5.7	4.58	14	5.9	4.84	14
	NQW08	9.9	6.49	24	10.4	6.82	25	10.8	7.18	26	11.1	7.56	27
	NQW10	13.1	10.00	31	13.6	10.46	33	14.1	10.97	34	14.6	11.52	35
	NQW15	14.8	14.25	36	15.6	14.74	37	16.2	15.30	39	16.7	15.92	40
	NQW20	20.3	16.75	49	21.3	17.59	51	22.2	18.63	53	23.0	19.74	55
	NQW25	24.7	23.24	60	25.9	24.16	62	26.9	25.24	65	27.8	26.39	67
	NQW30	33.7	28.72	81	35.3	29.66	85	36.7	30.79	88	38.0	32.03	91
	NQW35	34.3	29.13	83	35.4	30.27	85	37.0	32.09	89	38.3	33.98	92
	NQW40	52.0	32.80	126	54.4	34.67	131	56.6	36.70	136	58.5	38.81	141

[1]LCWT = Leaving Coolant Temperature.

[2]Cap = Capacity in tons of refrigeration based on a coolant temperature rise of 10°F (5.6°C), cooler fouling factor of 0.0001 ft^2 • hr • °F/Btu, condenser fouling factor of 0.00025 ft^2 • hr • °F/Btu, subcooling of 10°F, the use of an appropriate ethylene glycol solution where needed, and use of R-410A refrigerant.

[3]kW = Compressor motor(s) input power at rated voltage.

Table 10 – NQR Series Remote Air-Cooled Condenser Chiller Cooling Capacities (60 Hz)

LCWT[1] (°F)	Model	Condenser Entering Air Temperature (°F)											
		85			90			95			100		
		Cap[2]	Input kW[3]	Cooler Flow (gpm)	Cap[2]	Input kW[3]	Cooler Flow (gpm)	Cap[2]	Input kW[3]	Cooler Flow (gpm)	Cap[2]	Input kW[3]	Cooler Flow (gpm)
20	NQR05	3.2	4.05	9	3.1	4.29	8	3.0	4.54	8	2.9	4.80	8
	NQR08	4.7	5.71	13	4.6	6.03	12	4.5	6.38	12	4.4	6.75	12
	NQR10	7.0	8.35	19	6.8	8.84	18	6.5	9.38	17	6.3	9.96	17
	NQR15	9.4	10.98	25	9.1	11.56	24	8.9	12.21	24	8.6	12.91	23
	NQR20	12.9	14.87	34	12.4	15.75	33	12.0	16.80	32	11.5	17.97	31
	NQR25	16.1	18.78	43	15.7	19.84	42	15.2	20.98	40	14.8	22.20	39
	NQR30	18.9	21.97	50	18.4	23.16	49	17.8	24.47	47	17.3	25.87	46
	NQR35	21.2	25.15	56	20.6	26.45	55	19.9	27.94	53	19.3	29.58	51
	NQR40	23.8	28.12	63	23.1	29.54	61	22.4	31.19	59	21.6	33.03	58
25	NQR05	3.6	4.06	9	3.5	4.29	9	3.3	4.54	9	3.2	4.80	8
	NQR08	5.2	5.78	14	5.1	6.10	13	4.9	6.46	13	4.8	6.83	13
	NQR10	7.7	8.47	20	7.5	8.96	19	7.2	9.51	19	7.0	10.09	18
	NQR15	10.3	11.16	27	10.1	11.74	26	9.8	12.40	26	9.5	13.10	25
	NQR20	14.2	15.10	37	13.7	15.96	36	13.3	17.00	35	12.7	18.15	33
	NQR25	17.6	19.11	46	17.2	20.17	45	16.8	21.33	44	16.3	22.56	42
	NQR30	20.7	22.34	54	20.2	23.52	53	19.6	24.84	51	19.0	26.25	50
	NQR35	23.4	25.63	61	22.7	26.91	59	22.1	28.38	57	21.4	30.00	56
	NQR40	26.3	28.65	68	25.5	30.06	66	24.7	31.69	64	23.9	33.49	62
30	NQR05	3.9	4.07	10	3.8	4.30	10	3.7	4.55	9	3.6	4.81	9
	NQR08	5.7	5.86	15	5.6	6.18	14	5.4	6.54	14	5.3	6.92	13
	NQR10	8.5	8.61	22	8.2	9.09	21	8.0	9.63	20	7.7	10.22	20
	NQR15	11.3	11.35	29	11.1	11.94	28	10.8	12.59	27	10.4	13.29	27
	NQR20	15.6	15.34	40	15.1	16.19	39	14.6	17.22	37	14.1	18.35	36
	NQR25	19.3	19.45	49	18.9	20.51	48	18.4	21.68	47	17.8	22.92	46
	NQR30	22.8	22.73	58	22.2	23.90	57	21.6	25.23	55	20.9	26.64	54
	NQR35	25.7	26.17	66	25.0	27.43	64	24.3	28.89	62	23.5	30.49	60
	NQR40	28.9	29.26	74	28.1	30.65	72	27.2	32.26	70	26.4	34.04	68
35	NQR05	4.3	4.08	11	4.2	4.30	11	4.1	4.55	10	3.9	4.81	10
	NQR08	6.3	5.95	16	6.1	6.27	15	5.9	6.63	15	5.8	7.01	15
	NQR10	9.3	8.74	23	9.0	9.23	23	8.7	9.78	22	8.4	10.36	21
	NQR15	12.4	11.55	31	12.1	12.14	30	11.8	12.80	30	11.4	13.50	29
	NQR20	17.1	15.58	43	16.6	16.44	42	16.0	17.46	40	15.5	18.58	39
	NQR25	21.1	19.81	53	20.6	20.88	52	20.1	22.05	50	19.5	23.30	49
	NQR30	24.9	23.13	63	24.3	24.32	61	23.6	25.64	59	22.9	27.06	58
	NQR35	28.2	26.73	71	27.5	28.02	69	26.6	29.48	67	25.8	31.08	65
	NQR40	31.7	29.90	80	30.8	31.32	77	29.9	32.93	75	29.0	34.70	73

[1]LCWT = Leaving Coolant Temperature.

[2]Cap = Capacity in tons of refrigeration based on a coolant temperature rise of 10°F, a cooler fouling factor of 0.0001 ft^2 • hr • °F/Btu, the use of an appropriate ethylene glycol solution where needed, R-410A refrigerant, and operating at sea level. For higher elevations capacity is reduced by applying the following capacity factors for elevations above sea level: 1,000 feet elevation = 0.98, 2,000 feet elevation = 0.95, 3,000 feet elevation = 0.93, 4,000 feet elevation = 0.91, 5,000 feet elevation = 0.89, 6,000 feet elevation = 0.87, 7,000 feet elevation = 0.85. 8,000 feet elevation = 0.81, more than 8,000 feet elevation consult factory.

[3]kW = Compressors and condenser fan motors input power at rated voltage.

Table 10 –NQR Series Remote Air-Cooled Condenser Chiller Cooling Capacities (60 Hz) – Continued

LCWT[1] (°F)	Model	Condenser Entering Air Temperature (°F)											
		85			90			95			100		
		Cap[2]	Input kW[3]	Cooler Flow (gpm)	Cap[2]	Input kW[3]	Cooler Flow (gpm)	Cap[2]	Input kW[3]	Cooler Flow (gpm)	Cap[2]	Input kW[3]	Cooler Flow (gpm)
40	NQR05	4.9	4.09	12	4.8	4.31	12	4.7	4.55	11	4.5	4.82	11
	NQR08	7.1	6.09	17	6.9	6.42	17	6.7	6.78	16	6.5	7.16	16
	NQR10	10.5	8.97	25	10.2	9.46	24	9.9	10.00	24	9.6	10.58	23
	NQR15	14.0	11.88	33	13.6	12.46	33	13.3	13.12	32	12.9	13.82	31
	NQR20	19.2	15.96	46	18.6	16.82	45	18.1	17.83	43	17.4	18.94	42
	NQR25	23.7	20.36	57	23.1	21.41	55	22.5	22.59	54	21.9	23.84	52
	NQR30	28.0	23.78	67	27.3	24.95	65	26.5	26.27	63	25.7	27.69	62
	NQR35	31.9	27.59	76	31.0	28.91	74	30.1	30.38	72	29.1	31.98	70
	NQR40	35.7	30.85	85	34.7	32.30	83	33.6	33.92	81	32.6	35.69	78
45	NQR05	5.4	4.09	13	5.3	4.32	13	5.1	4.56	12	5.0	4.82	12
	NQR08	7.8	6.20	19	7.6	6.52	18	7.3	6.87	18	7.1	7.27	17
	NQR10	11.4	9.15	27	11.1	9.66	27	10.8	10.18	26	10.4	10.77	25
	NQR15	15.2	12.14	36	14.8	12.75	36	14.4	13.38	35	14.0	14.09	34
	NQR20	20.9	16.24	50	20.3	17.17	49	19.7	18.14	47	19.1	19.25	46
	NQR25	25.9	20.78	62	25.2	21.89	60	24.5	23.03	59	23.8	24.29	57
	NQR30	30.4	24.31	73	29.7	25.46	71	28.8	26.87	69	28.0	28.24	67
	NQR35	34.8	28.30	83	33.8	29.68	81	32.8	31.13	79	31.8	32.75	76
	NQR40	38.9	31.65	93	37.9	33.17	91	36.8	34.76	88	35.6	36.55	85
50	NQR05	5.9	4.10	14	5.7	4.32	14	5.6	4.56	13	5.4	4.82	13
	NQR08	8.4	6.31	20	8.2	6.63	20	8.0	7.01	19	7.8	7.38	19
	NQR10	12.4	9.34	30	12.0	9.85	29	11.7	10.40	28	11.3	10.96	27
	NQR15	16.5	12.45	40	16.1	13.06	39	15.7	13.71	38	15.2	14.41	36
	NQR20	22.7	16.55	54	22.1	17.49	53	21.4	18.52	51	20.7	19.63	50
	NQR25	28.1	21.26	67	27.4	22.37	66	26.6	23.55	64	25.8	24.81	62
	NQR30	33.0	24.94	79	32.2	26.16	77	31.3	27.48	75	30.4	28.90	73
	NQR35	37.9	28.99	91	36.8	30.44	88	35.7	31.98	86	34.7	33.57	83
	NQR40	42.4	32.43	102	41.2	34.02	99	40.0	35.72	96	38.8	37.55	93
55	NQR05	6.0	4.11	14	6.2	4.33	15	6.1	4.57	15	5.9	4.82	14
	NQR08	9.2	6.42	22	8.9	6.75	21	8.7	7.14	21	8.4	7.53	20
	NQR10	13.4	9.55	32	13.0	10.06	31	12.7	10.61	30	12.3	11.19	29
	NQR15	17.8	12.79	43	17.4	13.40	42	16.9	14.05	41	16.4	14.75	39
	NQR20	24.5	16.88	59	23.9	17.83	57	23.2	18.87	56	22.5	20.00	54
	NQR25	29.4	21.78	71	29.6	22.89	71	28.8	24.07	69	28.0	25.33	67
	NQR30	35.7	25.64	86	34.8	26.86	84	33.9	28.18	81	32.9	29.59	79
	NQR35	40.8	29.73	98	40.0	31.23	96	38.8	32.81	93	37.6	34.50	90
	NQR40	46.0	33.26	111	44.8	34.91	107	43.5	36.66	104	42.1	38.53	101

[1]LCWT = Leaving Coolant Temperature.

[2]Cap = Capacity in tons of refrigeration based on a coolant temperature rise of 10°F, a cooler fouling factor of 0.0001 ft^2 • hr • °F/Btu, the use of an appropriate ethylene glycol solution where needed, R-410A refrigerant, and operating at sea level. For higher elevations capacity is reduced by applying the following capacity factors for elevations above sea level: 1,000 feet elevation = 0.98, 2,000 feet elevation = 0.95, 3,000 feet elevation = 0.93, 4,000 feet elevation = 0.91, 5,000 feet elevation = 0.89, 6,000 feet elevation = 0.87, 7,000 feet elevation = 0.85. 8,000 feet elevation = 0.81, more than 8,000 feet elevation consult factory.

[3]kW = Compressors and condenser fan motors input power at rated voltage.

Table 10 –NQR Series Remote Air-Cooled Condenser Chiller Cooling Capacities (60 Hz) – Continued

LCWT[1] (°F)	Model	Condenser Entering Air Temperature (°F)											
		85			90			95			100		
		Cap[2]	Input kW[3]	Cooler Flow (gpm)	Cap[2]	Input kW[3]	Cooler Flow (gpm)	Cap[2]	Input kW[3]	Cooler Flow (gpm)	Cap[2]	Input kW[3]	Cooler Flow (gpm)
60	NQR05	5.9	4.12	14	6.1	4.33	15	6.2	4.57	15	6.4	4.82	15
	NQR08	9.9	6.54	24	9.7	6.89	23	9.4	7.26	23	9.1	7.65	22
	NQR10	14.5	9.77	35	14.1	10.29	34	13.7	10.84	33	13.2	11.43	32
	NQR15	17.5	13.18	42	18.0	13.78	43	18.3	14.43	44	17.8	15.13	43
	NQR20	24.2	17.22	58	24.8	18.20	60	25.1	19.25	60	24.3	20.39	58
	NQR25	29.0	22.34	70	29.7	23.45	71	30.4	24.63	73	30.2	25.89	73
	NQR30	38.5	26.43	93	37.5	27.65	90	36.5	28.96	88	35.5	30.37	85
	NQR35	40.2	30.49	96	41.2	32.04	99	42.0	33.68	101	40.7	35.42	98
	NQR40	49.8	34.12	120	48.5	35.83	116	47.1	37.63	113	45.6	39.55	110
65	NQR05	5.8	4.12	14	6.0	4.33	14	6.1	4.57	15	6.3	4.83	15
	NQR08	10.7	6.67	26	10.5	7.00	25	10.2	7.39	24	9.8	7.78	24
	NQR10	14.9	10.02	36	15.2	10.54	36	14.7	11.09	35	14.3	11.68	34
	NQR15	17.2	13.62	41	17.7	14.22	43	18.1	14.87	43	18.4	15.57	44
	NQR20	23.8	17.58	57	24.4	18.58	59	25.0	19.66	60	25.4	20.81	61
	NQR25	28.5	22.95	68	29.2	24.06	70	29.9	25.24	72	30.5	26.50	73
	NQR30	39.1	27.33	94	40.2	28.54	97	39.3	29.85	94	38.2	31.25	92
	NQR35	39.6	31.25	95	40.6	32.88	98	41.5	34.57	100	42.2	36.37	101
	NQR40	53.8	34.98	130	52.3	36.77	126	50.8	38.64	122	49.3	40.62	118
70	NQR05	5.6	4.13	14	5.8	4.34	14	6.0	4.58	14	6.2	4.83	15
	NQR08	11.1	6.80	27	11.3	7.12	27	11.0	7.51	26	10.6	7.92	26
	NQR10	14.7	10.30	35	15.1	10.81	36	15.4	11.36	37	15.3	11.95	37
	NQR15	16.9	14.12	41	17.4	14.71	42	17.8	15.36	43	18.1	16.05	44
	NQR20	23.3	17.97	56	24.0	18.91	58	24.6	20.09	59	25.0	21.26	60
	NQR25	27.9	23.63	67	28.7	24.72	69	29.4	25.90	71	30.0	27.16	72
	NQR30	38.3	28.35	92	39.5	29.55	95	40.4	30.84	97	41.0	32.24	99
	NQR35	38.9	32.06	94	40.0	33.73	96	40.8	35.50	98	41.6	37.35	100
	NQR40	58.0	35.88	139	56.4	37.74	136	54.8	39.68	132	53.1	41.73	128
75	NQR05	5.5	4.13	13	5.7	4.35	14	5.9	4.58	14	6.0	4.84	15
	NQR08	10.9	6.92	26	11.2	7.26	27	11.5	7.63	28	11.5	8.05	28
	NQR10	14.4	10.57	34	14.8	11.08	35	15.1	11.66	36	15.4	12.24	37
	NQR15	16.5	14.65	40	17.0	15.23	41	17.5	15.91	42	17.8	16.60	43
	NQR20	22.8	18.35	55	23.5	19.38	57	24.1	20.47	58	24.6	21.74	59
	NQR25	27.3	24.32	66	28.2	25.37	68	28.9	26.62	70	29.5	27.85	71
	NQR30	37.5	29.45	90	38.7	30.60	93	39.7	31.97	96	40.5	33.33	98
	NQR35	38.1	32.79	92	39.2	34.52	94	40.2	36.44	97	40.9	38.33	98
	NQR40	57.6	36.71	138	59.2	38.62	142	58.9	40.74	142	57.1	42.83	137

[1]LCWT = Leaving Coolant Temperature.

[2]Cap = Capacity in tons of refrigeration based on a coolant temperature rise of 10°F, a cooler fouling factor of 0.0001 ft^2 • hr • °F/Btu, the use of an appropriate ethylene glycol solution where needed, R-410A refrigerant, and operating at sea level. For higher elevations capacity is reduced by applying the following capacity factors for elevations above sea level: 1,000 feet elevation = 0.98, 2,000 feet elevation = 0.95, 3,000 feet elevation = 0.93, 4,000 feet elevation = 0.91, 5,000 feet elevation = 0.89, 6,000 feet elevation = 0.87, 7,000 feet elevation = 0.85. 8,000 feet elevation = 0.81, more than 8,000 feet elevation consult factory.

[3]kW = Compressors and condenser fan motors input power at rated voltage.

Table 10 –NQR Series Remote Air-Cooled Condenser Chiller Cooling Capacities (60 Hz) – Continued

LCWT[1] (°F)	Model	Condenser Entering Air Temperature (°F)											
		85			90			95			100		
		Cap[2]	Input kW[3]	Cooler Flow (gpm)	Cap[2]	Input kW[3]	Cooler Flow (gpm)	Cap[2]	Input kW[3]	Cooler Flow (gpm)	Cap[2]	Input kW[3]	Cooler Flow (gpm)
80	NQR05	5.3	4.14	13	5.6	4.36	13	5.7	4.59	14	5.9	4.84	14
	NQR08	10.6	7.05	26	11.0	7.39	26	11.3	7.77	27	11.5	8.16	28
	NQR10	14.1	10.90	34	14.5	11.40	35	14.8	11.95	36	15.1	12.57	36
	NQR15	16.2	15.29	39	16.7	15.85	40	17.1	16.48	41	17.5	17.21	42
	NQR20	22.3	18.81	54	23.0	19.86	55	23.6	21.00	57	24.1	22.18	58
	NQR25	26.8	25.13	64	27.6	26.17	66	28.3	27.32	68	29.0	28.66	70
	NQR30	36.6	30.75	88	37.8	31.88	91	38.9	33.14	94	39.8	34.61	96
	NQR35	38.1	33.67	92	39.2	35.51	94	40.1	37.43	97	40.9	39.44	99
	NQR40	57.5	37.70	139	59.2	39.73	143	60.7	41.85	146	61.2	44.06	148

[1]LCWT = Leaving Coolant Temperature.

[2]Cap = Capacity in tons of refrigeration based on a coolant temperature rise of 10°F, a cooler fouling factor of 0.0001 ft^2 • hr • °F/Btu, the use of an appropriate ethylene glycol solution where needed, R-410A refrigerant, and operating at sea level. For higher elevations capacity is reduced by applying the following capacity factors for elevations above sea level: 1,000 feet elevation = 0.98, 2,000 feet elevation = 0.95, 3,000 feet elevation = 0.93, 4,000 feet elevation = 0.91, 5,000 feet elevation = 0.89, 6,000 feet elevation = 0.87, 7,000 feet elevation = 0.85. 8,000 feet elevation = 0.81, more than 8,000 feet elevation consult factory.

[3]kW = Compressors and condenser fan motors input power at rated voltage.

General Dimensions Drawings

Figure 1 – NQA04 through NQA13 General Dimensions Drawing

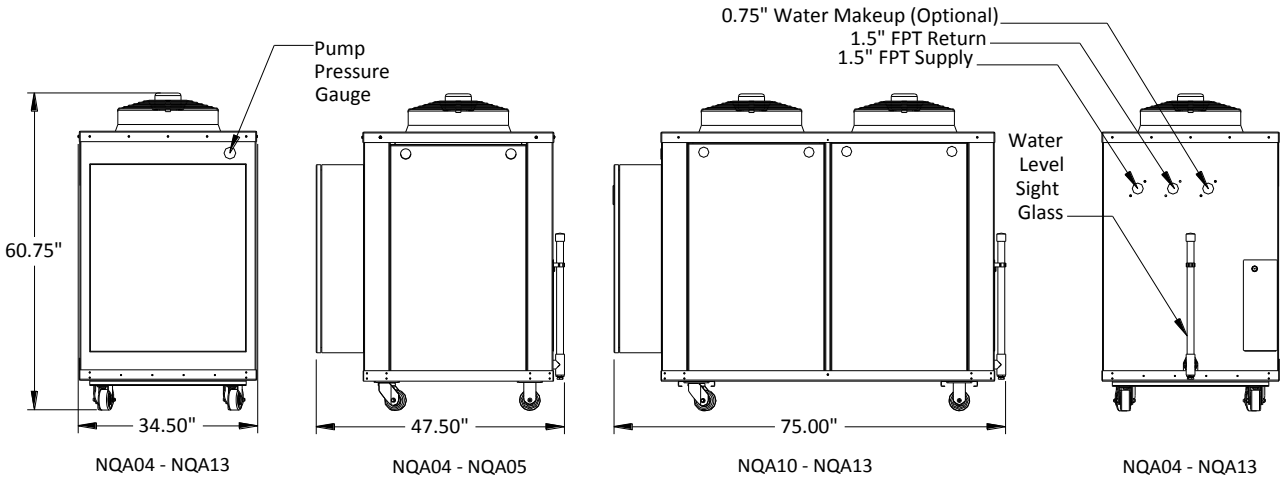

Figure 2 – NQA15 through NQA30 General Dimensions Drawing

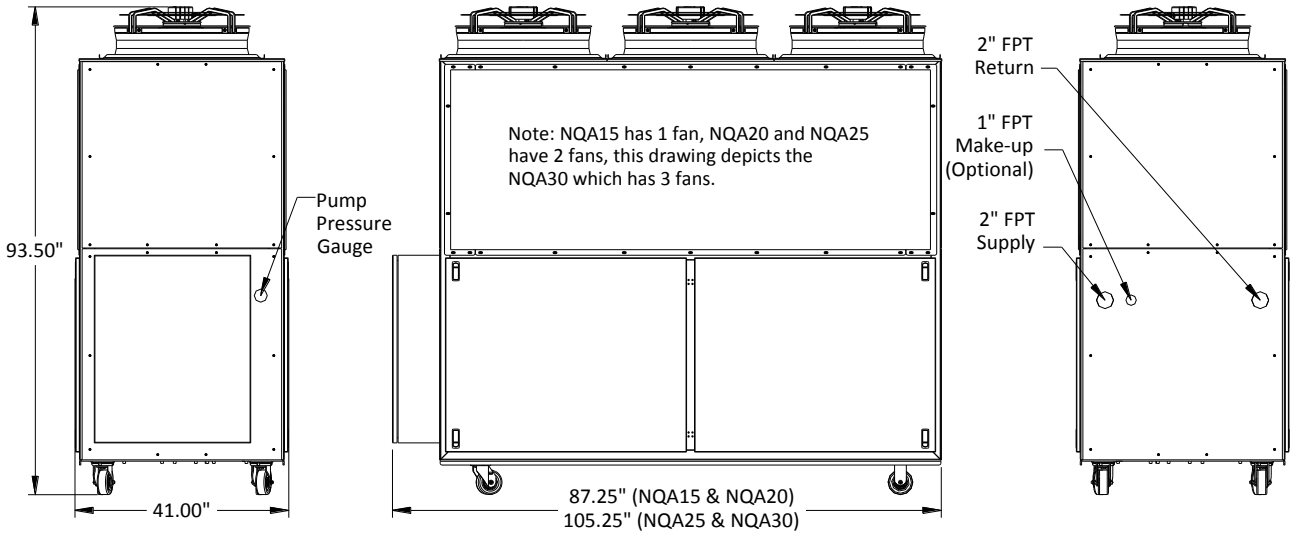

Figure 3 – NQW05 through NQW15 General Dimensions Drawing

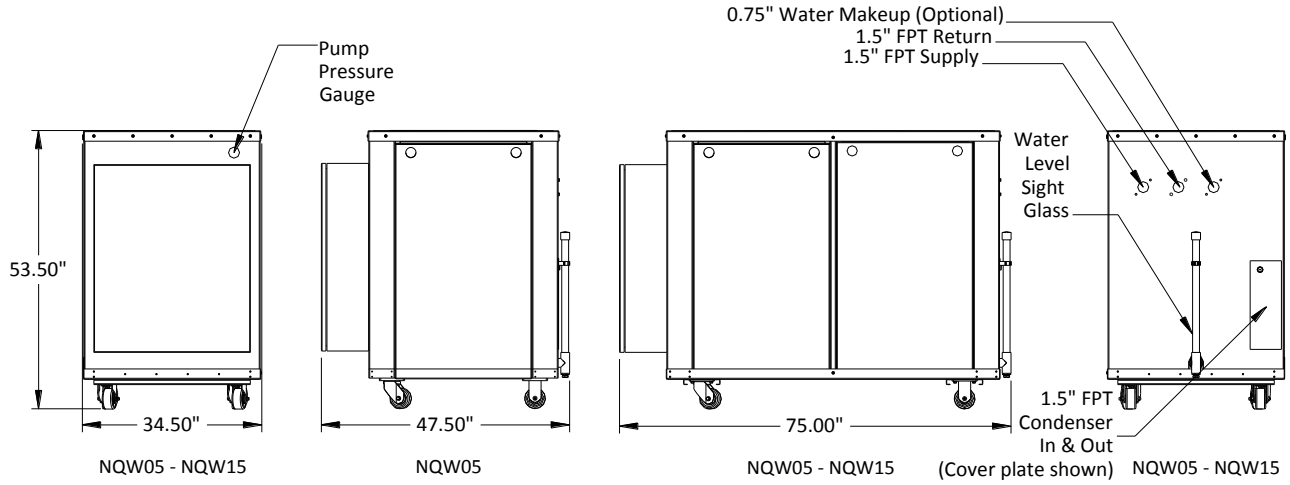

Figure 4 – NQW20 through NQW40 General Dimensions Drawing

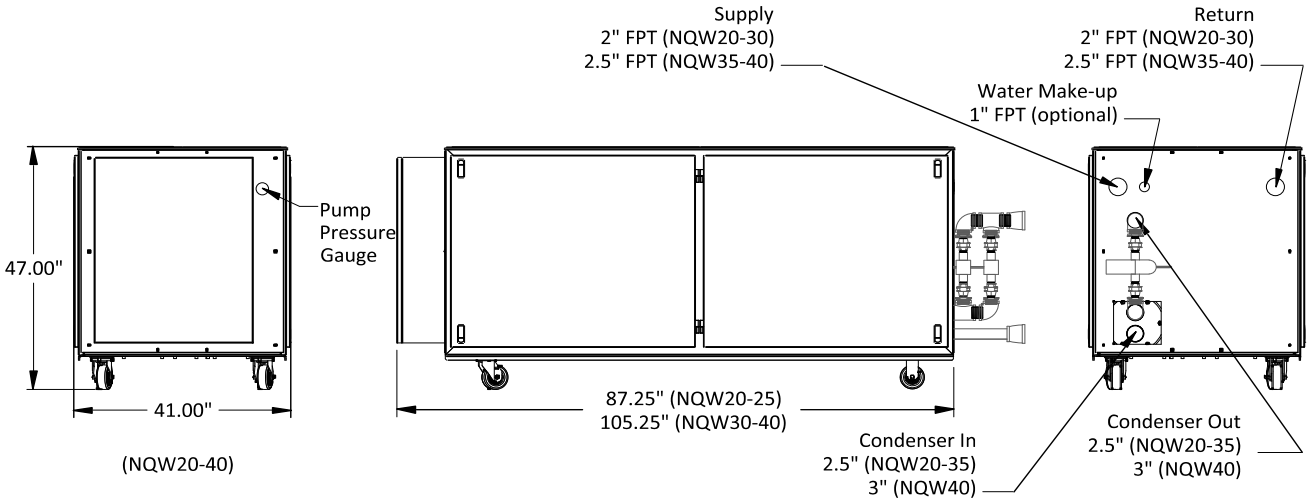

Figure 5 – NQR05 through NQR15 General Dimensions Drawing

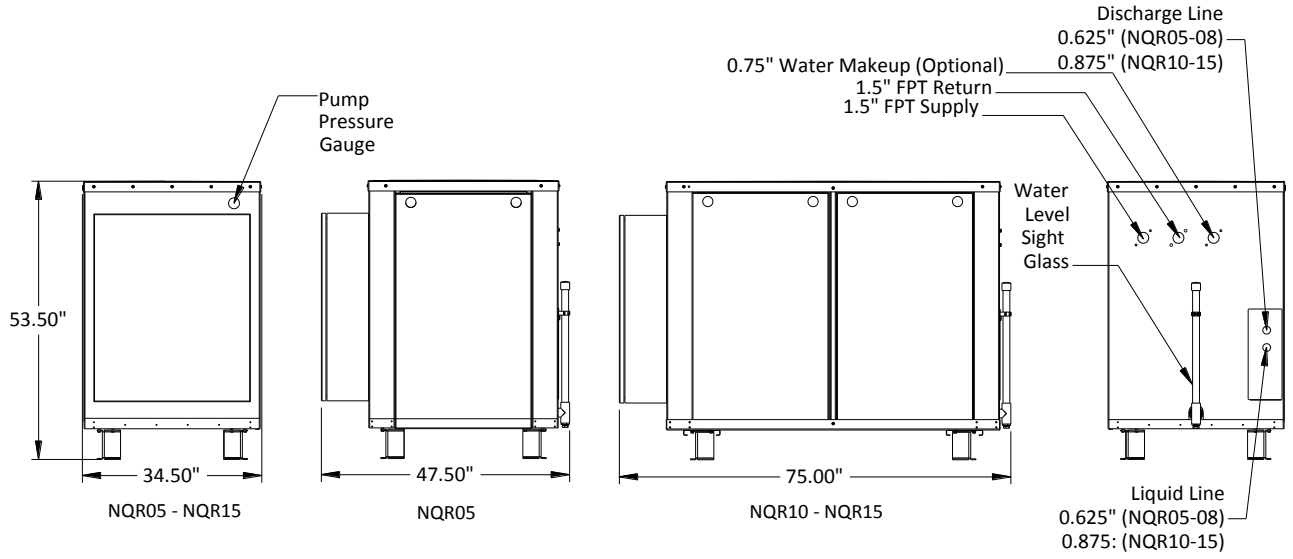

Figure 6 – NQR20 through NQR40 General Dimensions Drawing

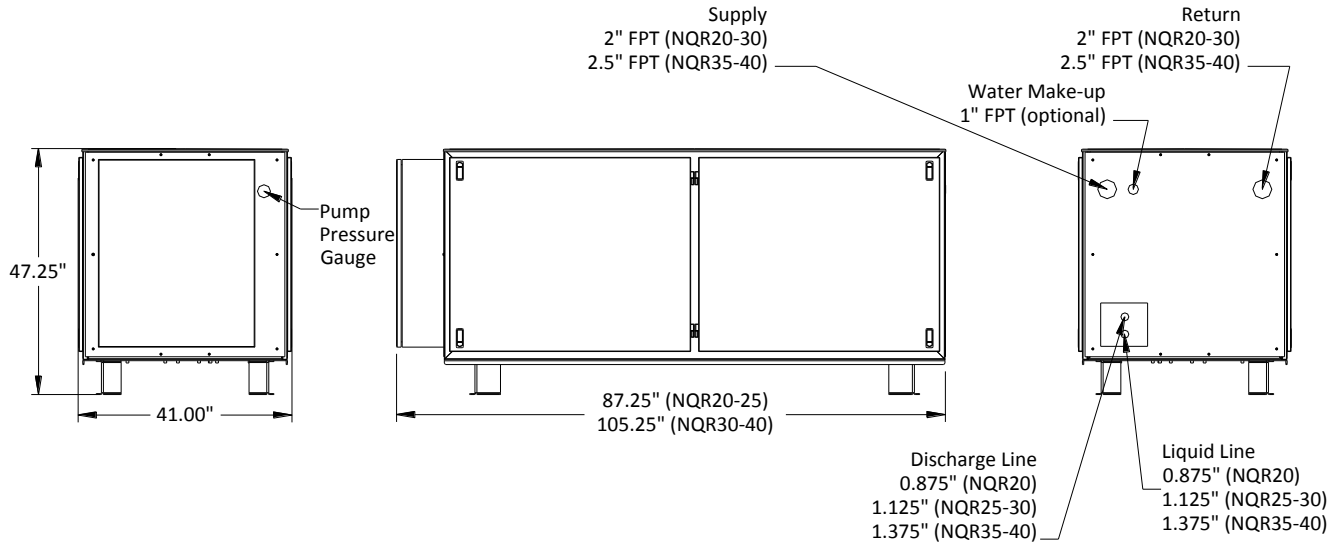

Figure 7 – KCM009 and KCM011 General Dimensions Drawing

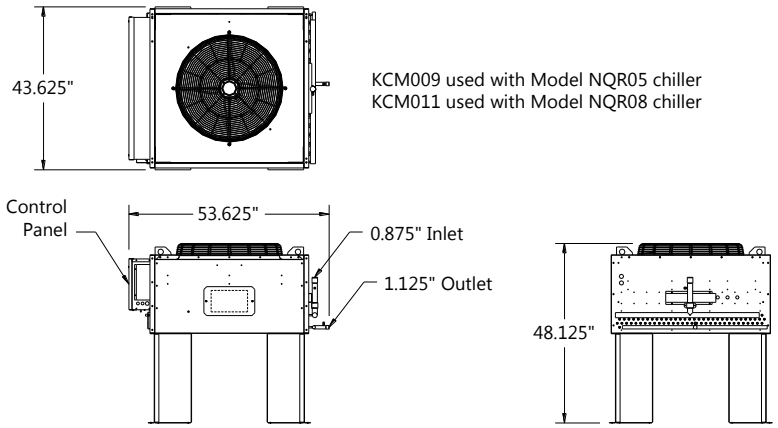

Figure 8 – KCM014 General Dimensions Drawing

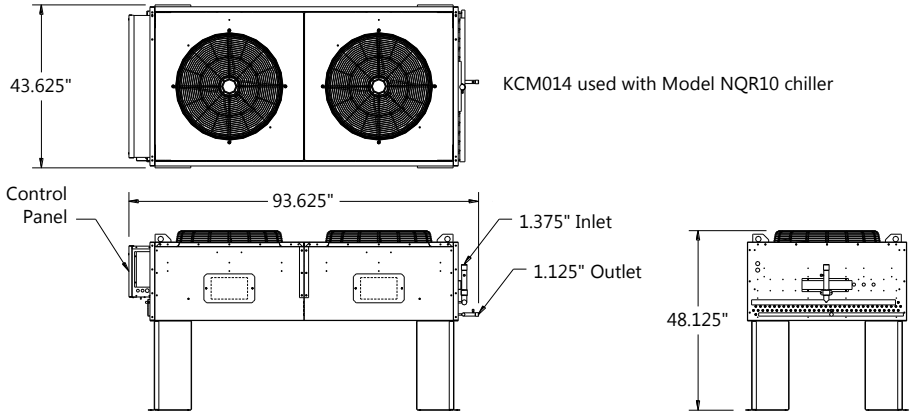

Figure 9 – KCL023, KCL030, and KCL037 General Dimensions Drawing

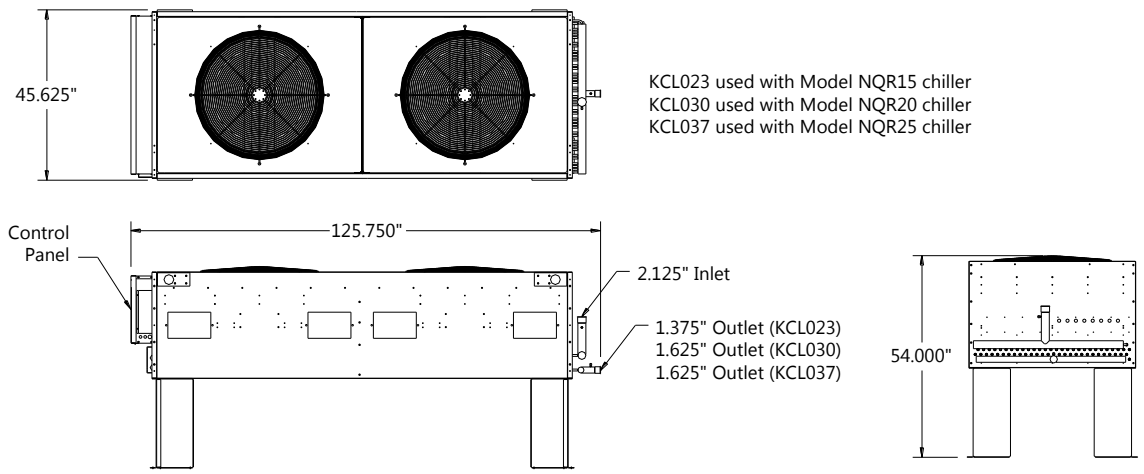

Figure 10 – KCL045, KCL054, and KCL056 General Dimensions Drawing

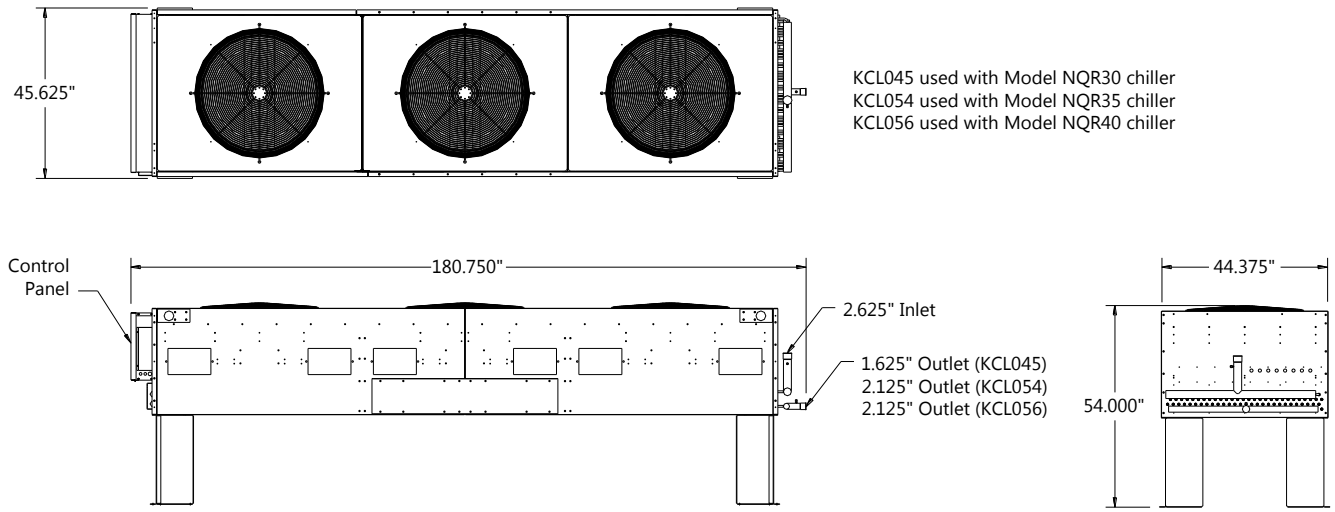

Pump Curves

Figure 11 – 4 Ton Chiller Net Pump Performances (60 Hz)

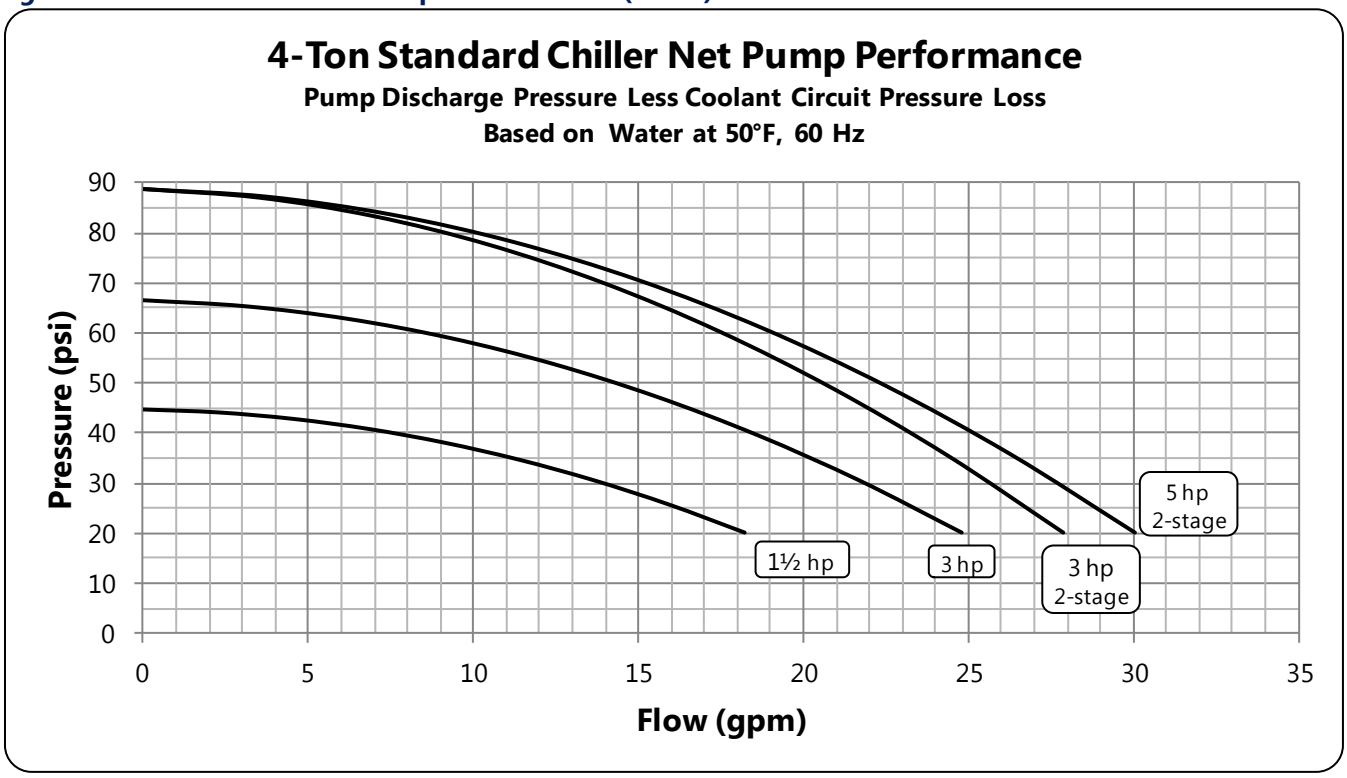

Figure 12 – 4 Ton High Flow Chiller Net Pump Performances (60 Hz)

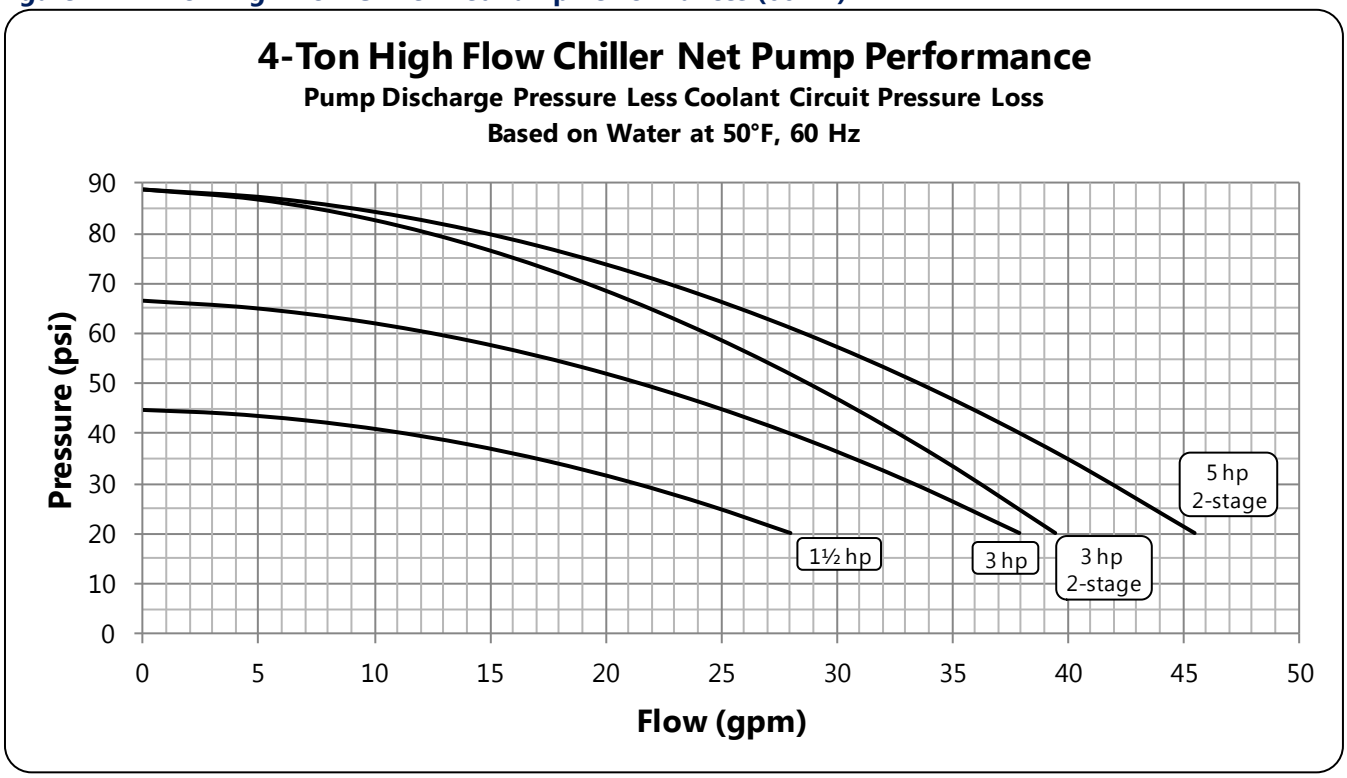

Figure 13 - 5 Ton Chiller Net Pump Performances (60 Hz)

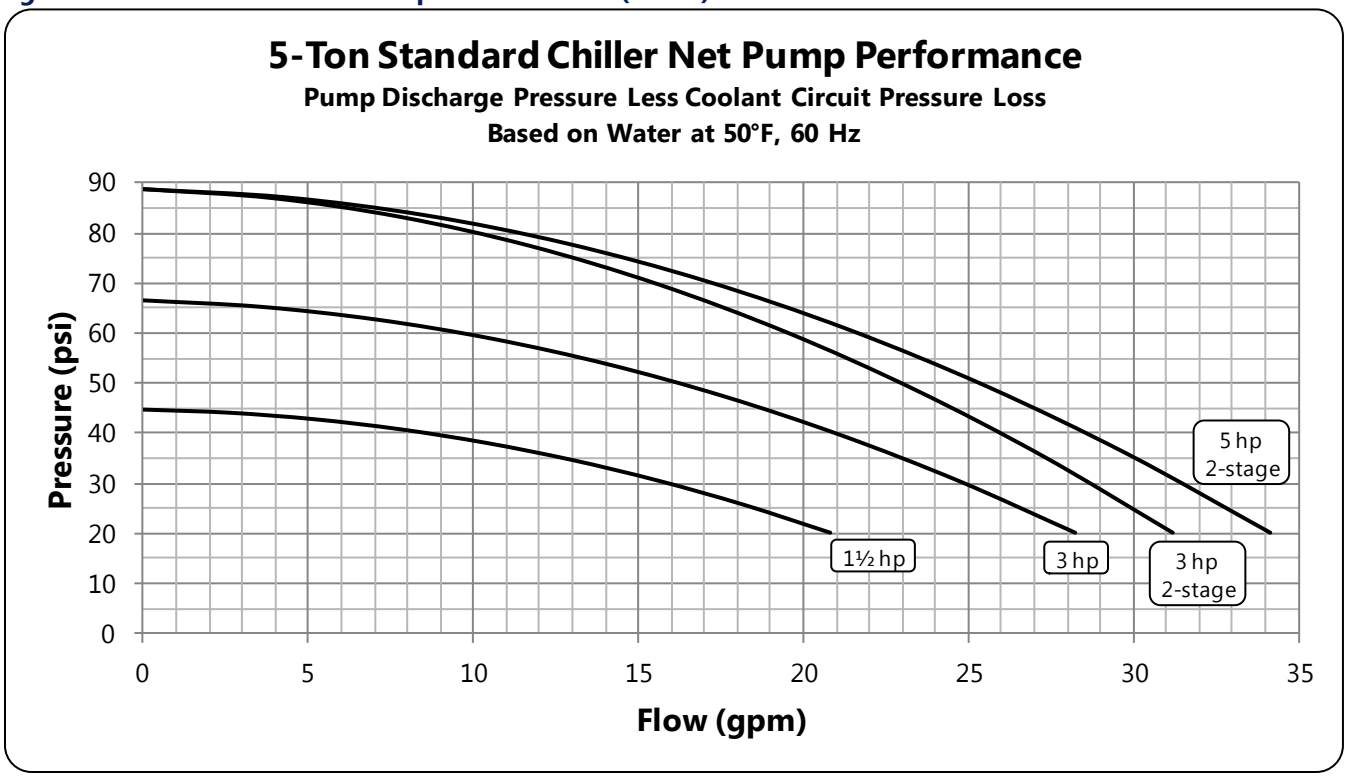

Figure 14 – 5 Ton High Flow Chiller Net Pump Performances (60 Hz)

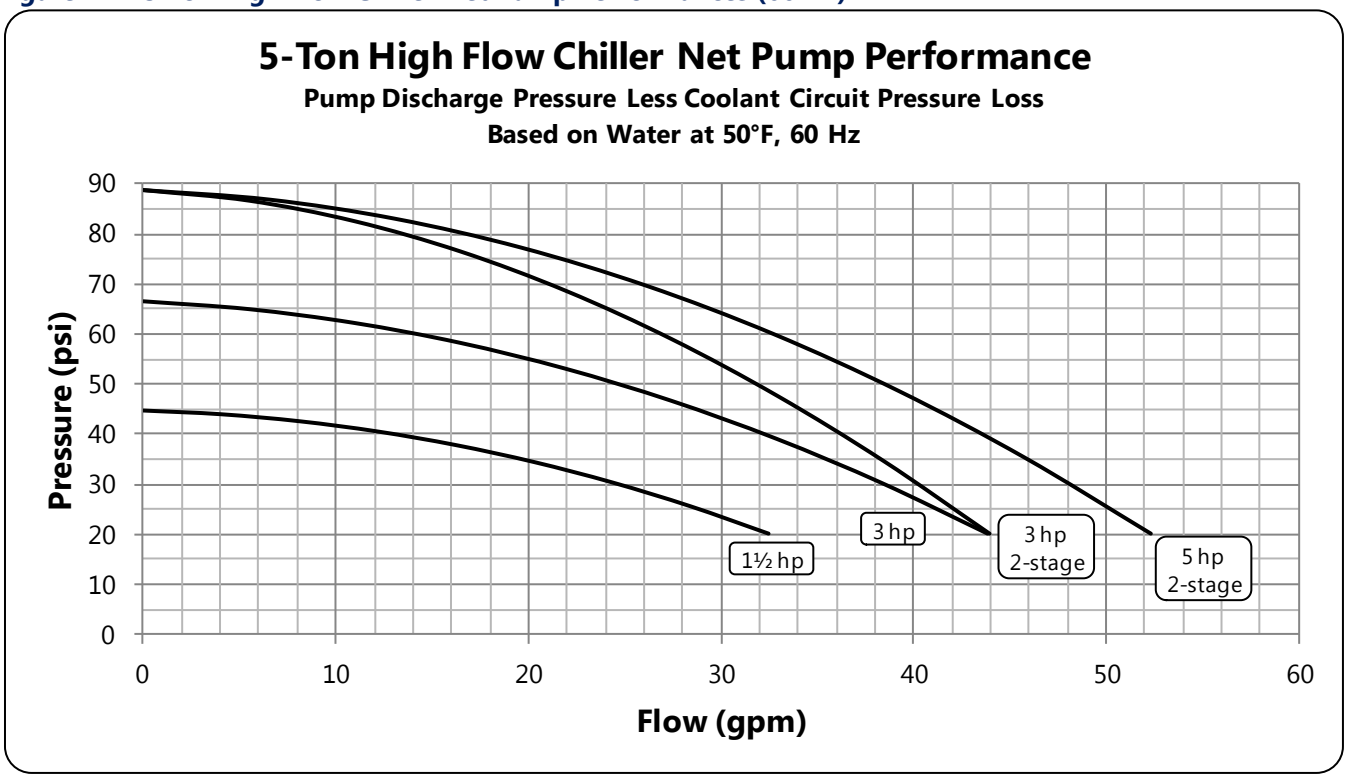

Figure 15 – 7½ Ton Chiller Net Pump Performances (60 Hz)

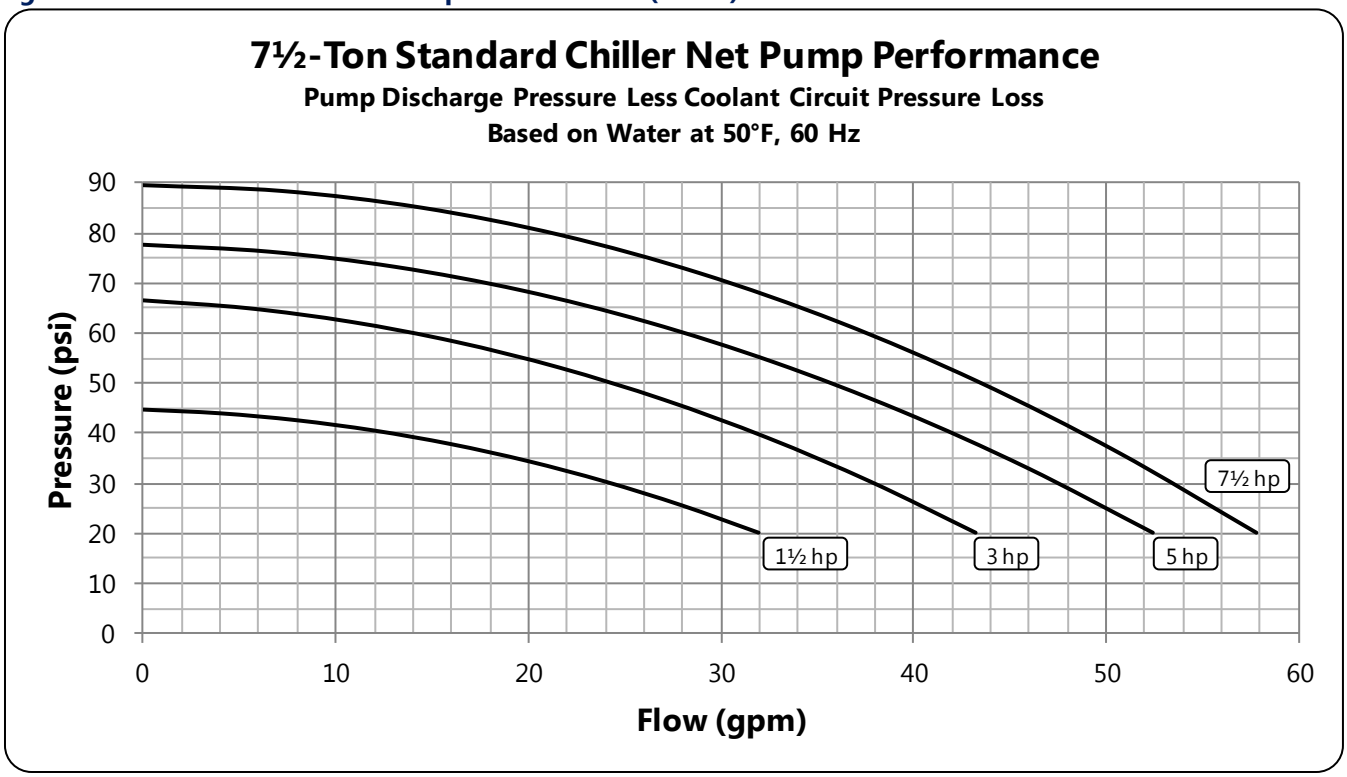

Figure 16 – 7½ Ton High Flow Chiller Net Pump Performances (60 Hz)

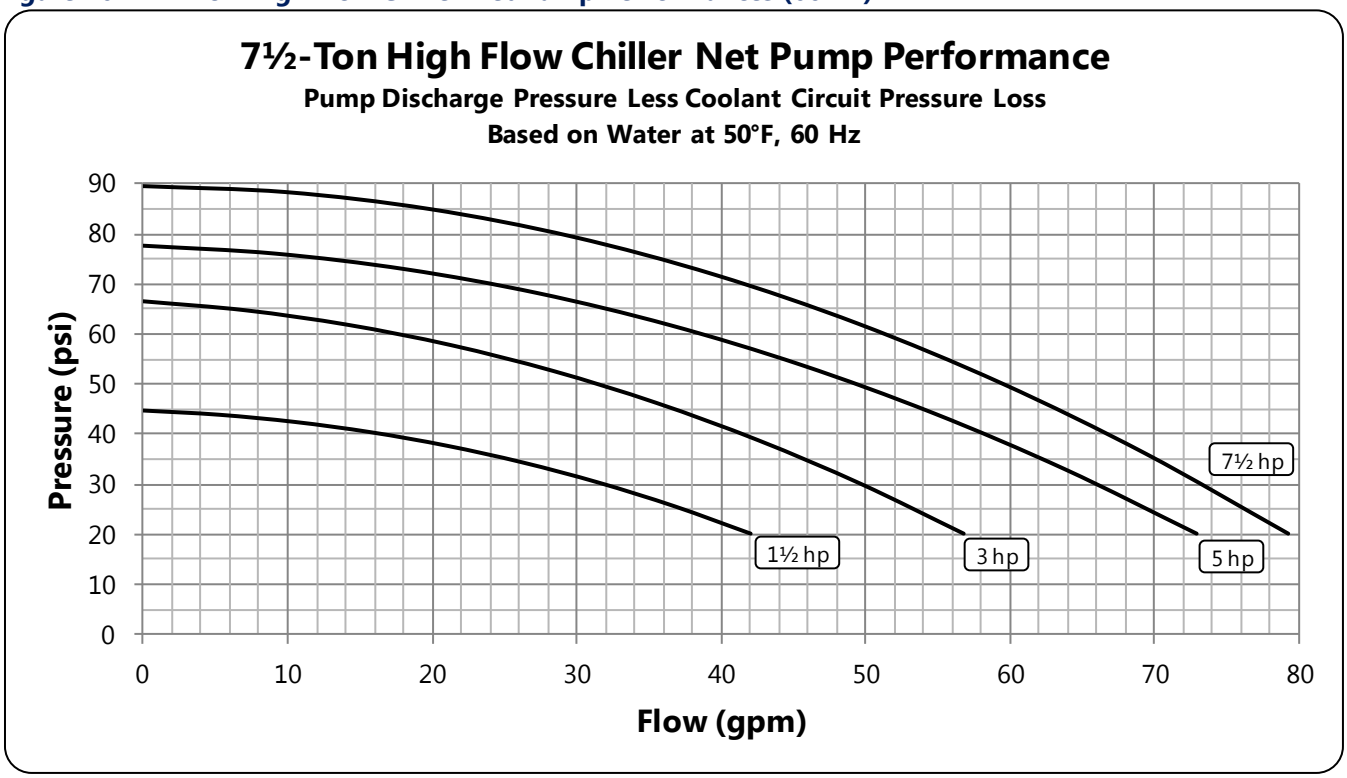

Figure 17 - 10 Ton Chiller Net Pump Performances (60 Hz)

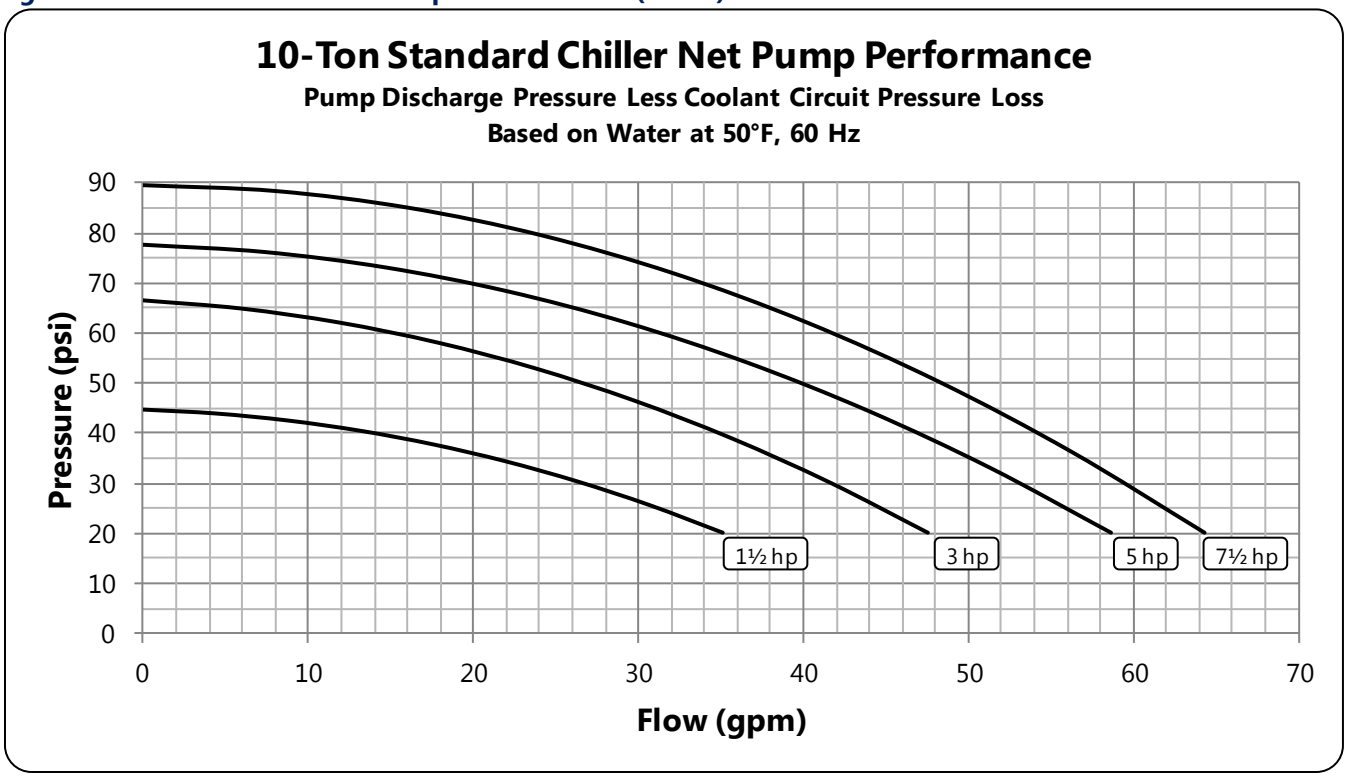

Figure 18 – 10 Ton High Flow Chiller Net Pump Performances (60 Hz)

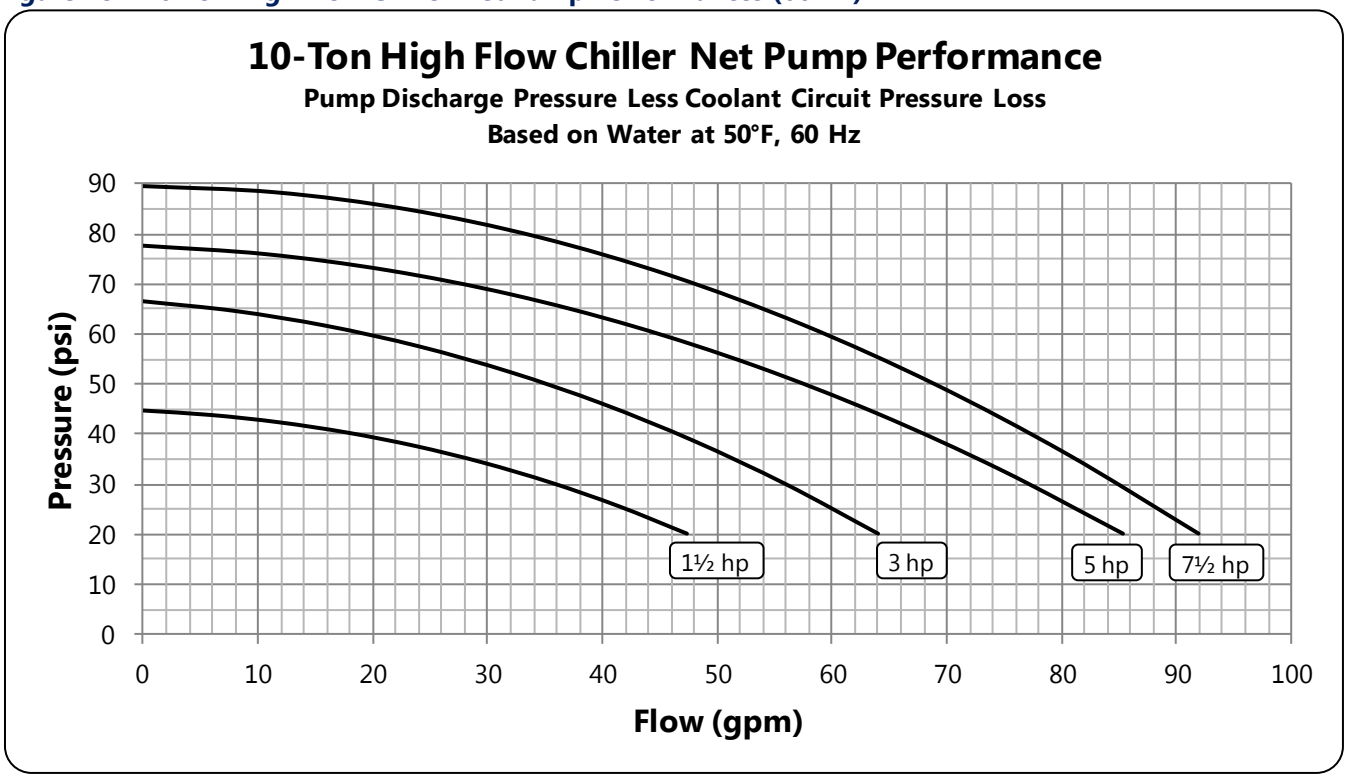

Figure 19 - 13 Ton Chiller Net Pump Performances (60 Hz)

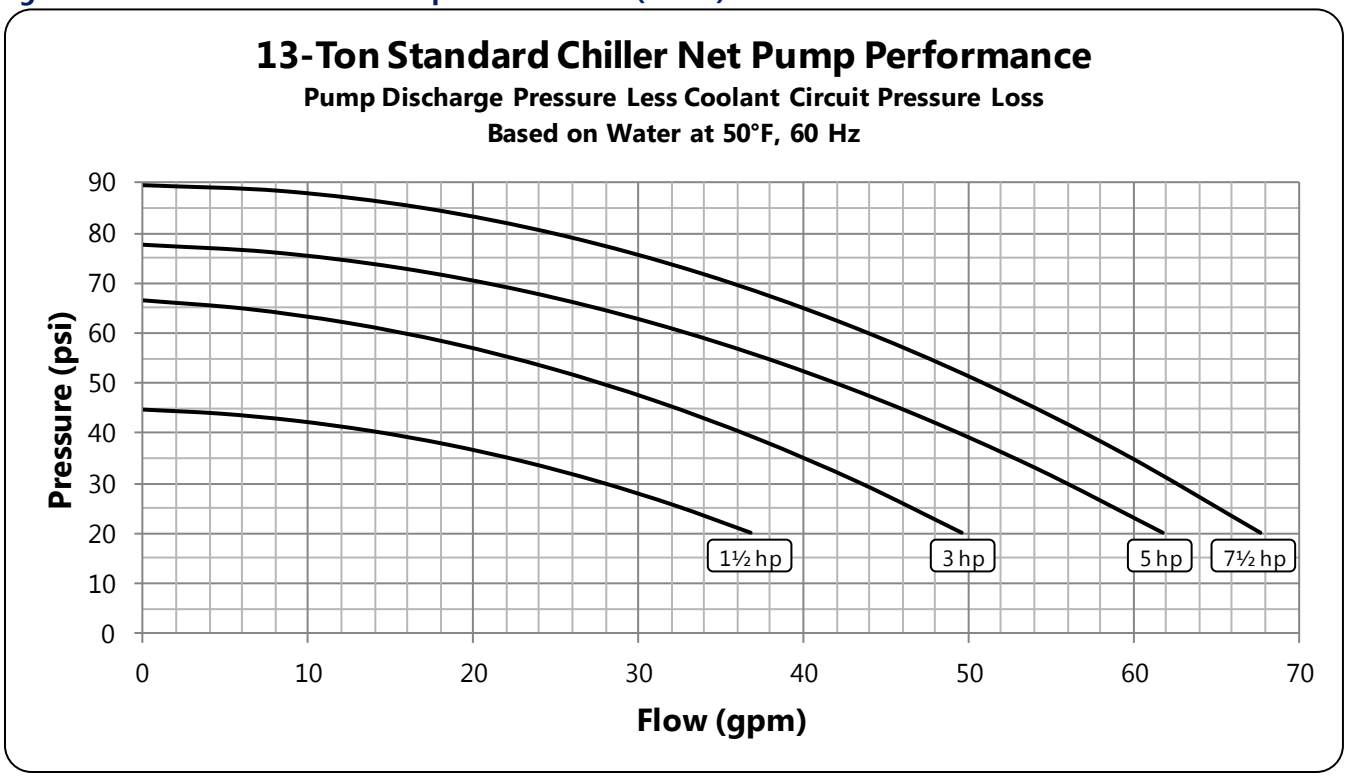

Figure 20 – 13 Ton High Flow Chiller Net Pump Performances (60 Hz)

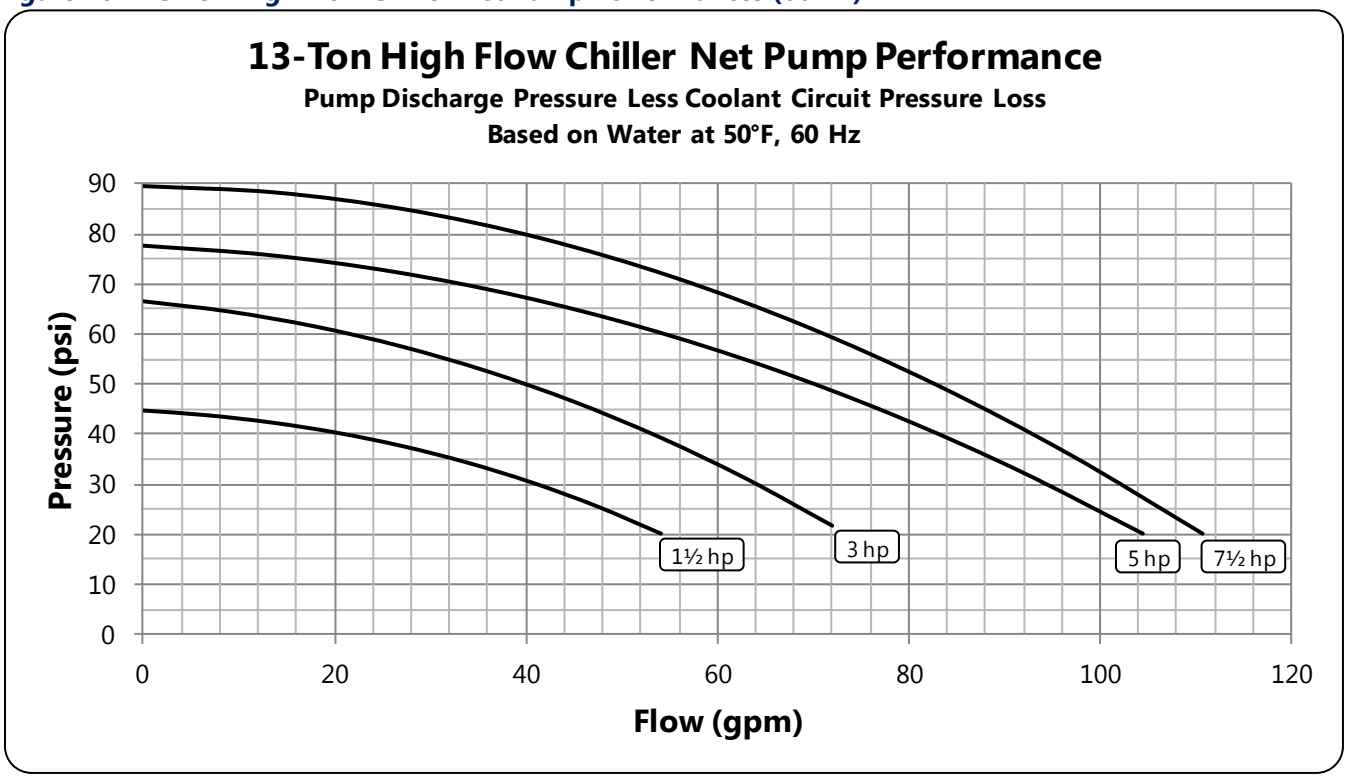

Figure 21 - 15 Ton Chiller Net Pump Performances (60 Hz)

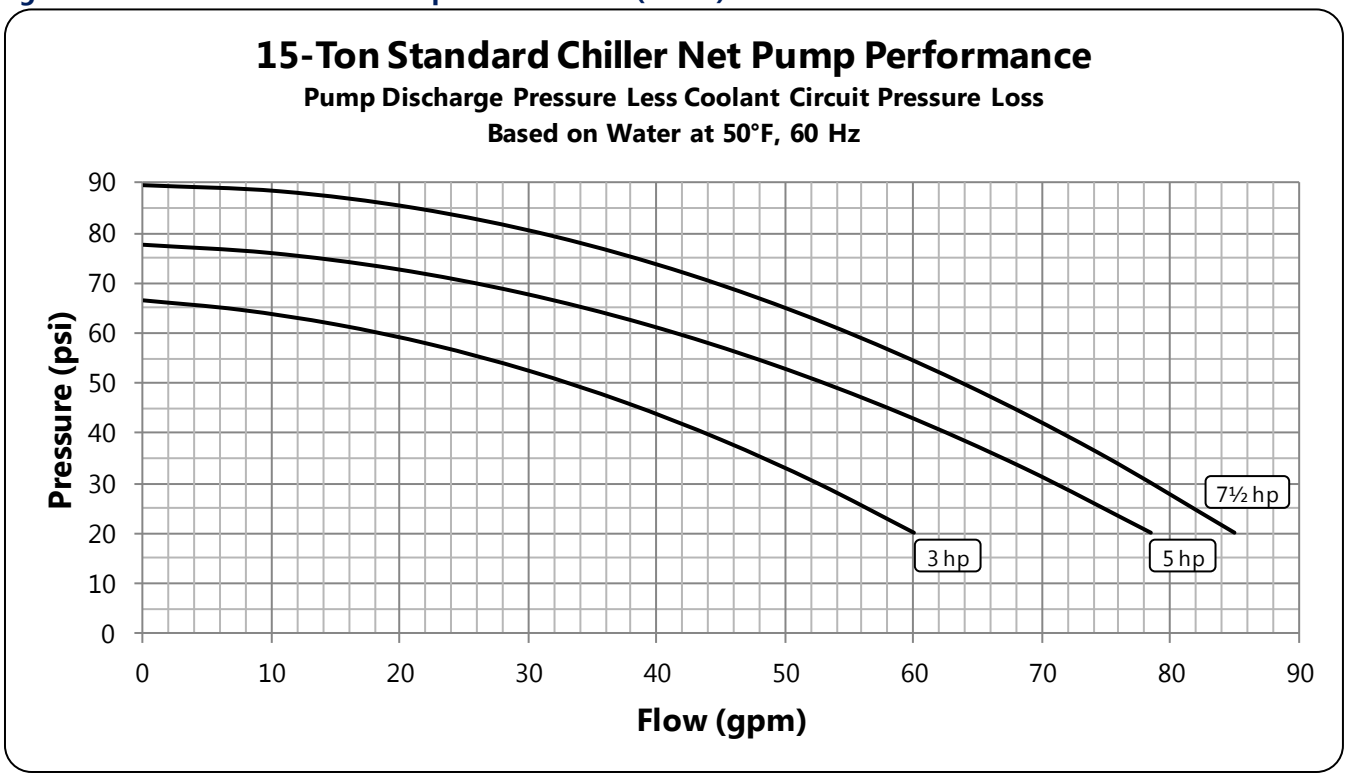

Figure 22 – 15 Ton High Flow Chiller Net Pump Performances (60 Hz)

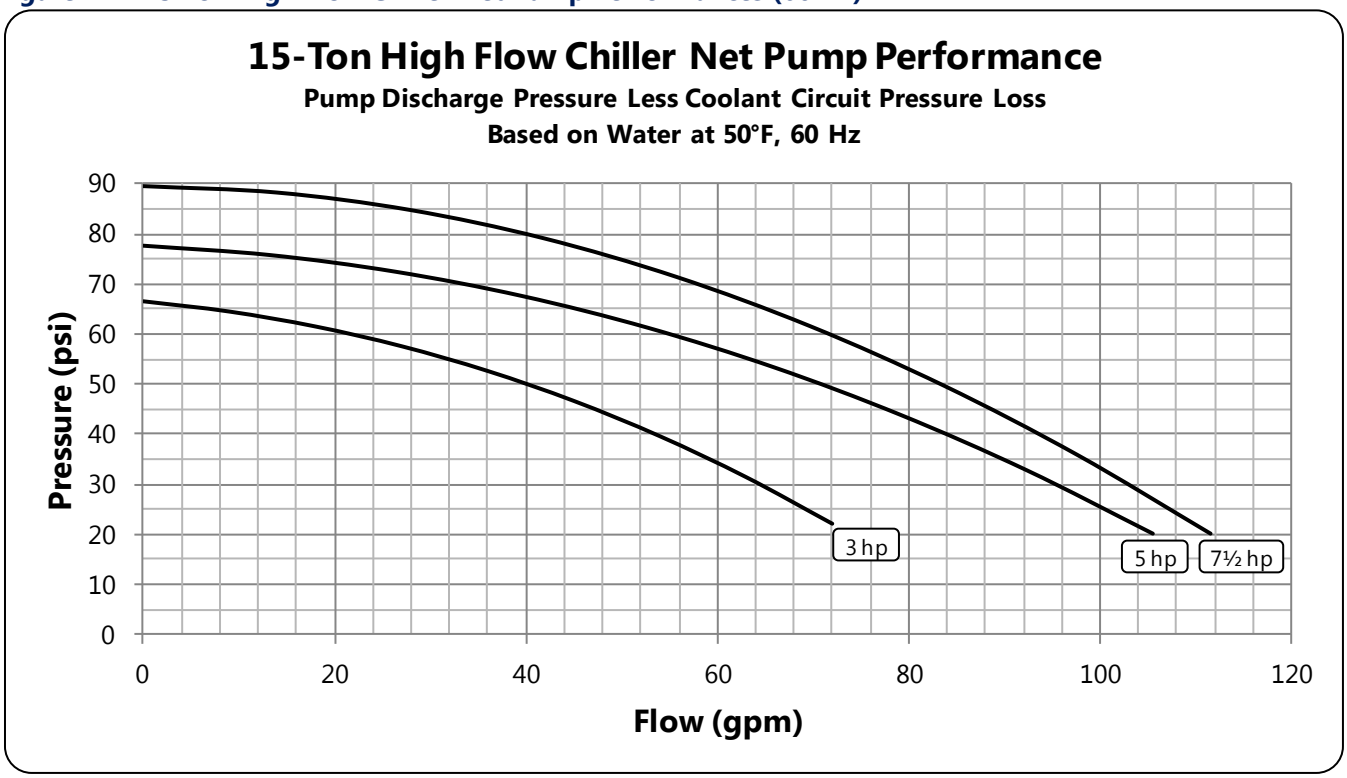

Figure 23 - 20 Ton Chiller Net Pump Performances (60 Hz)

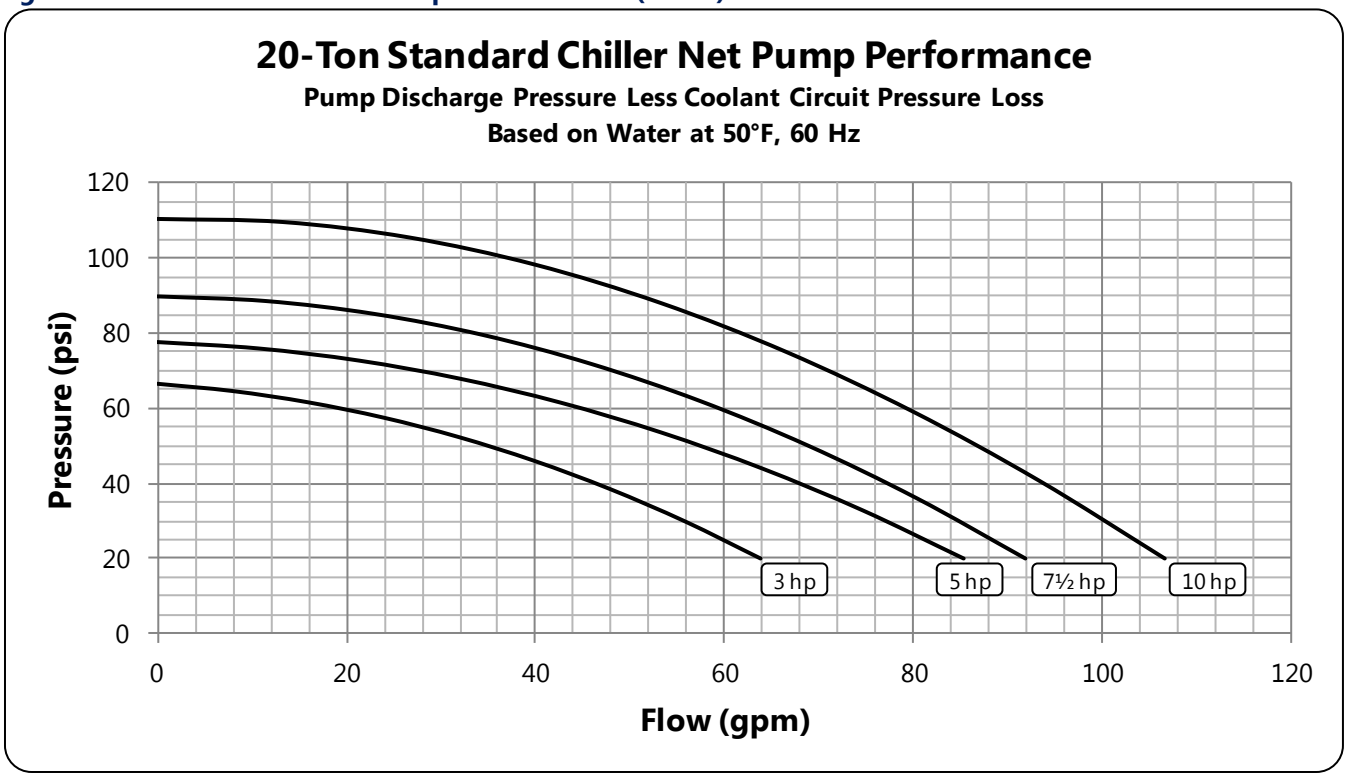

Figure 24 – 20 Ton High Flow Chiller Net Pump Performances (60 Hz)

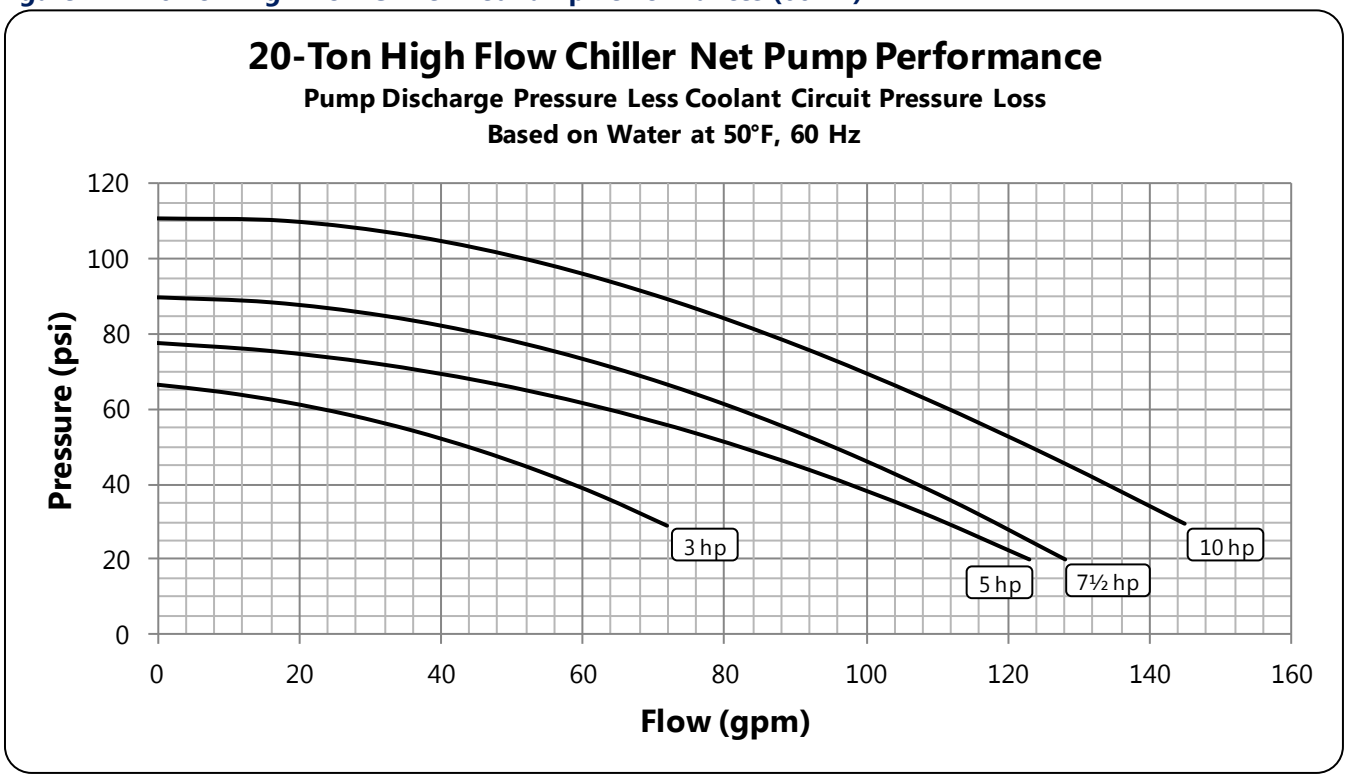

Figure 25 - 25 Ton Chiller Net Pump Performances (60 Hz)

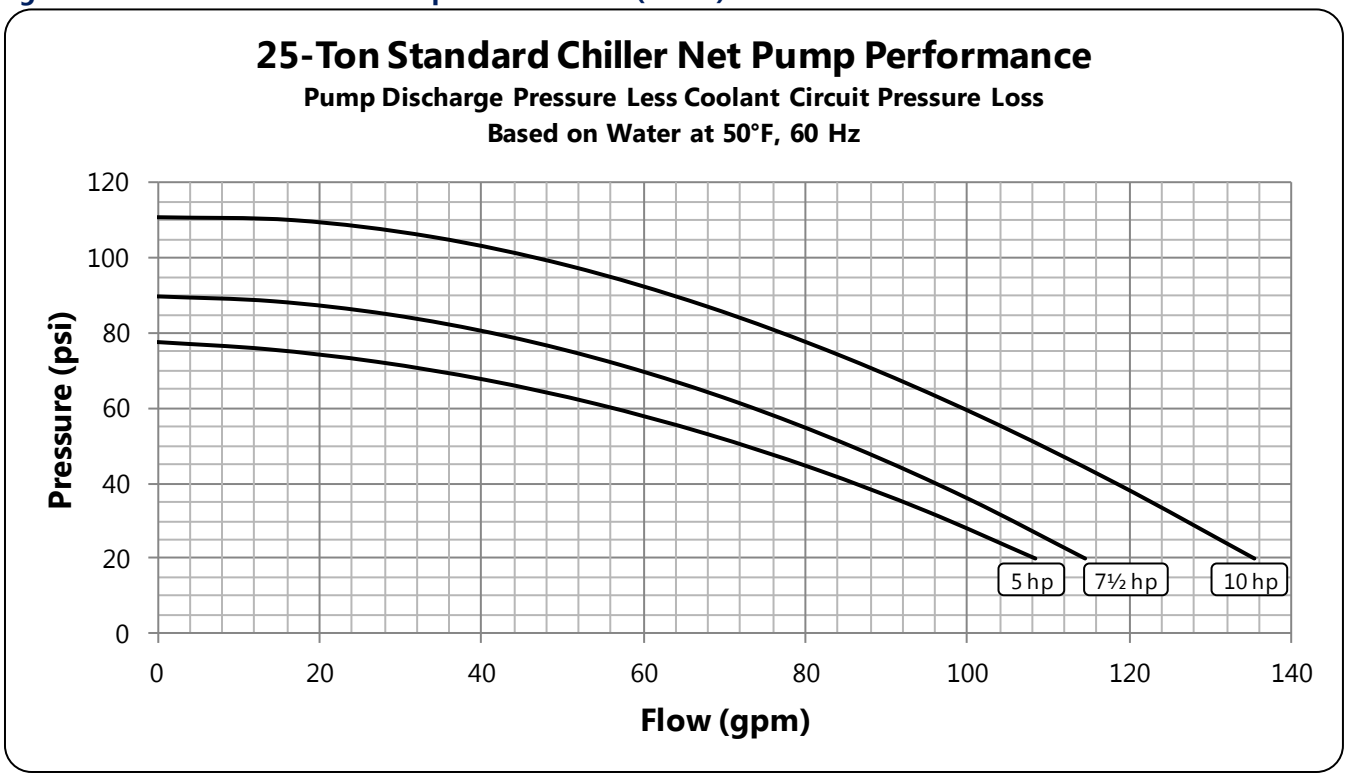

Figure 26 – 25 Ton High Flow Chiller Net Pump Performances (60 Hz)

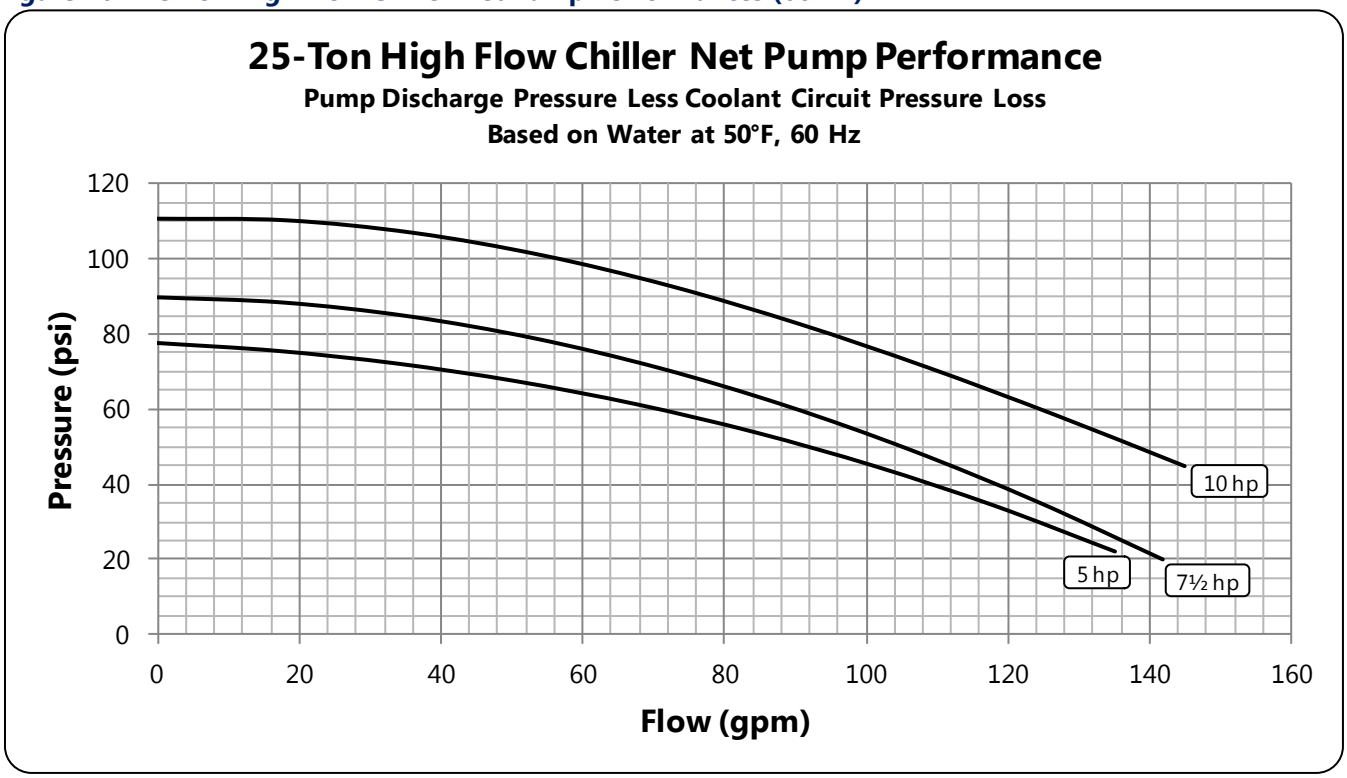

Figure 27 - 30 Ton Chiller Net Pump Performances (60 Hz)

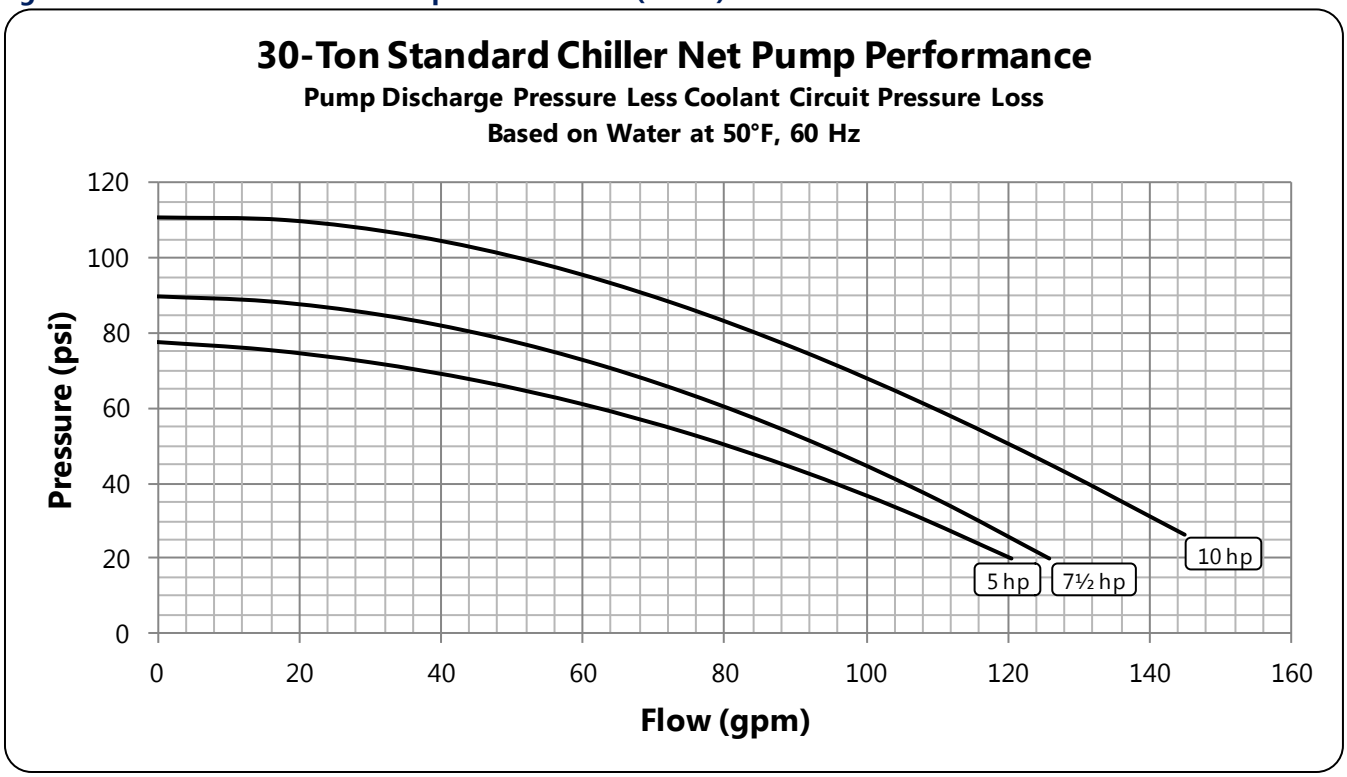

Figure 28 – 30 Ton High Flow Chiller Net Pump Performances (60 Hz)

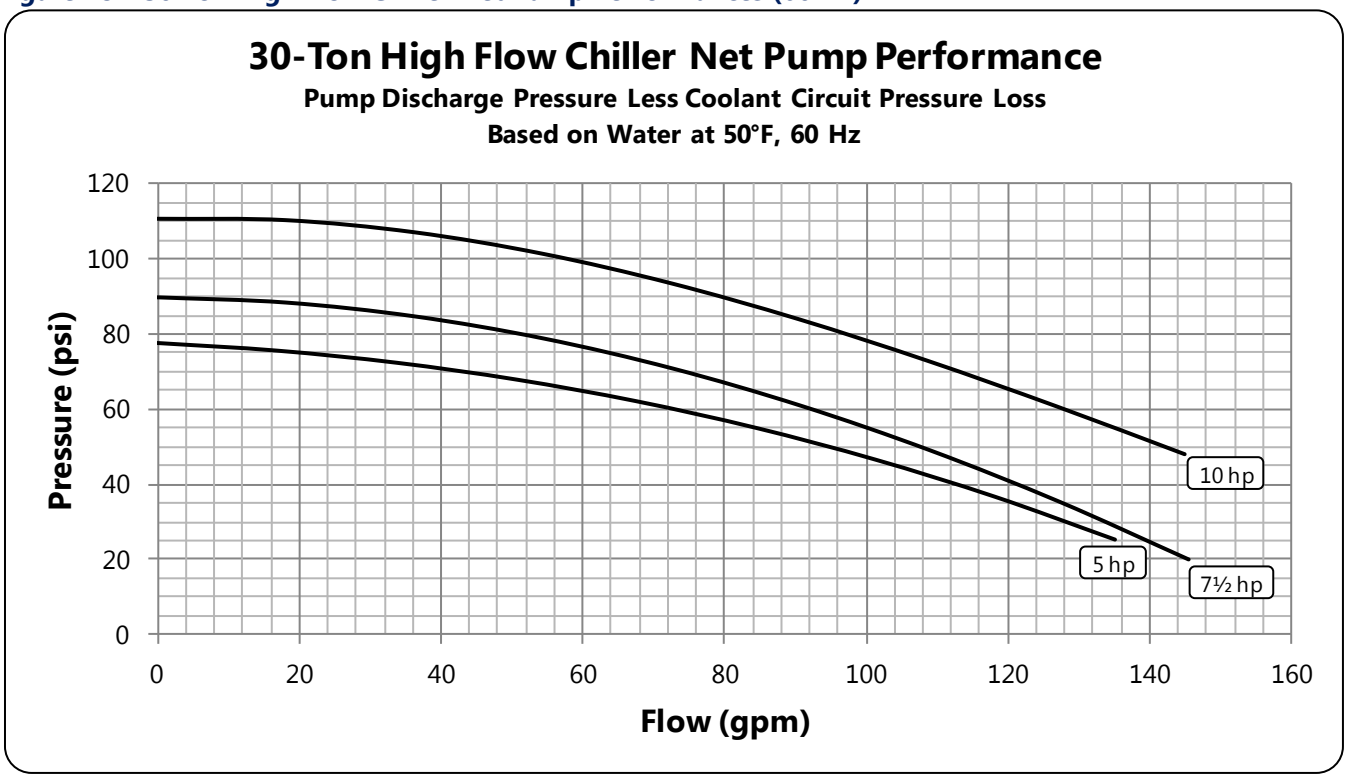

Figure 29 - 35 Ton Chiller Net Pump Performances (60 Hz)

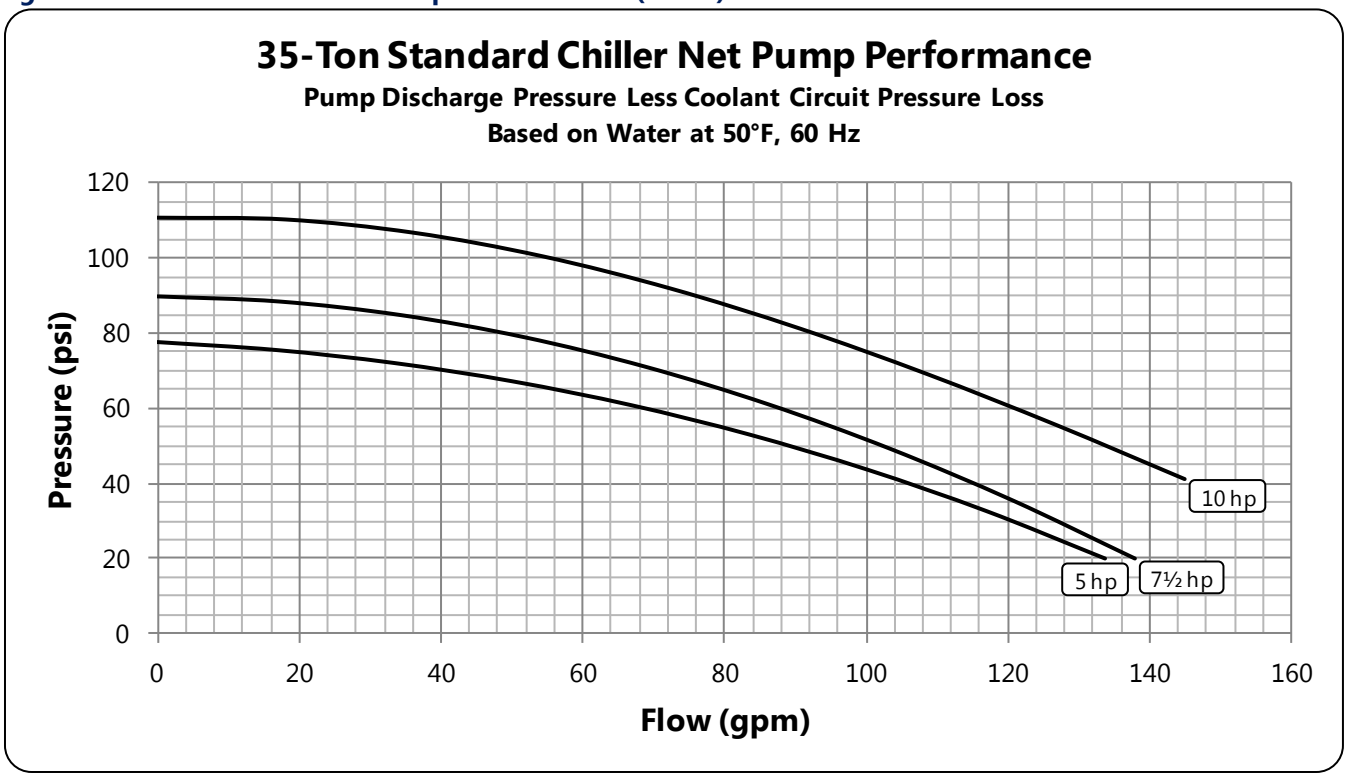

Figure 30 – 35 Ton High Flow Chiller Net Pump Performances (60 Hz)

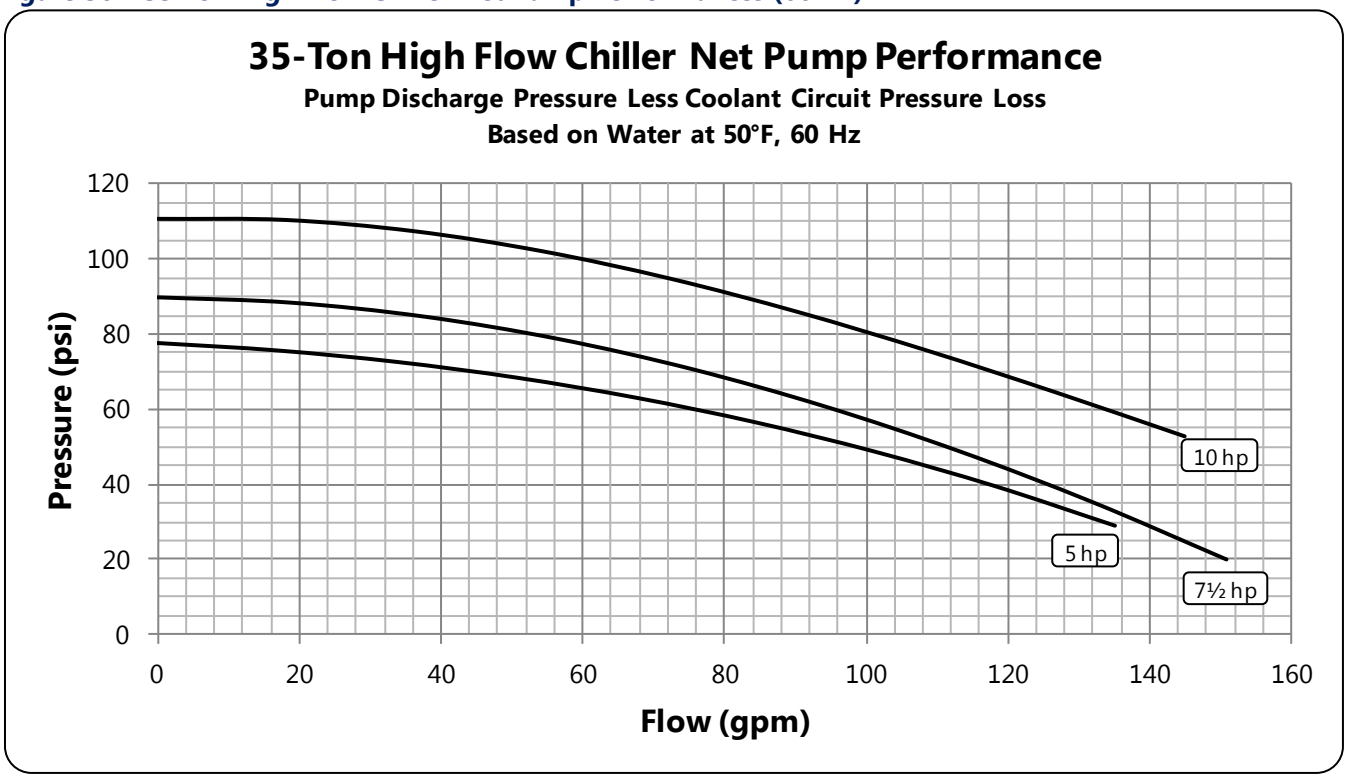

Figure 31 - 40 Ton Chiller Net Pump Performances (60 Hz)

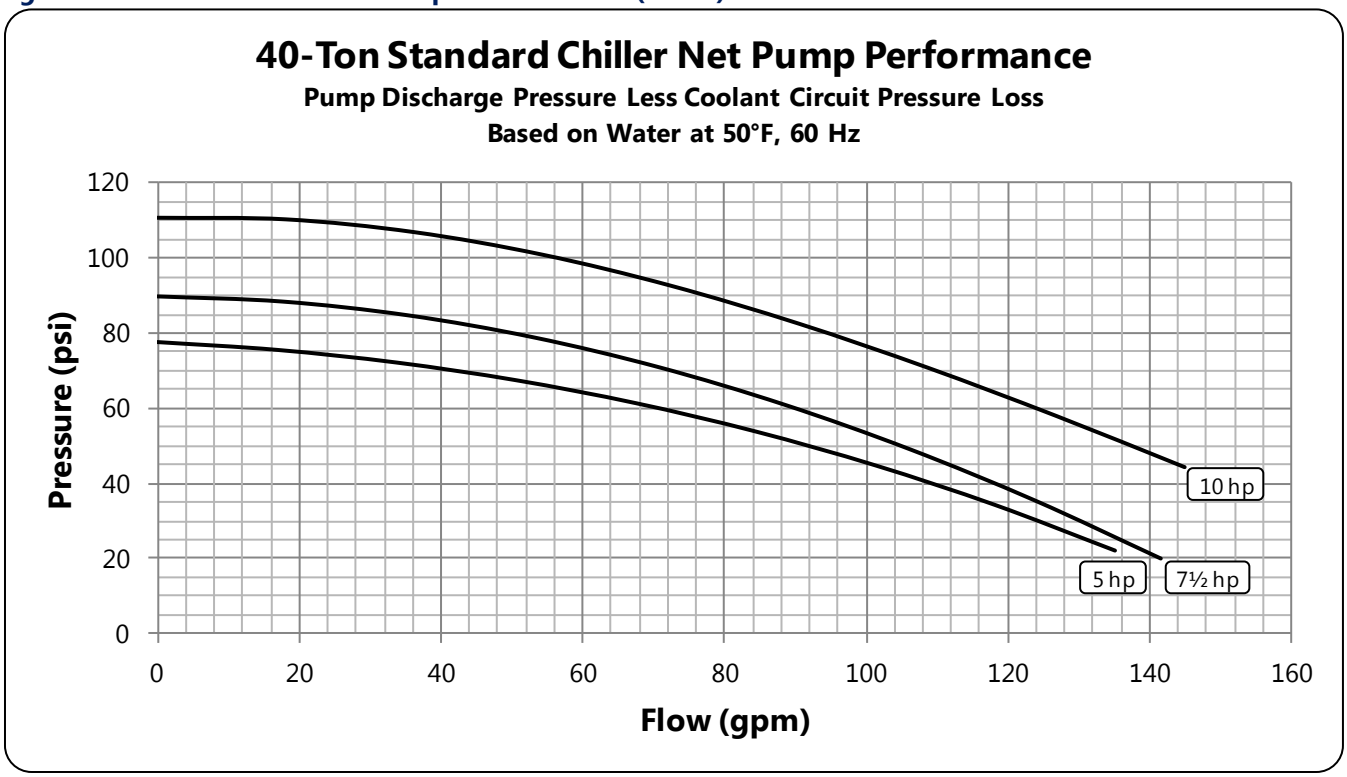

Figure 32 – 40 Ton High Flow Chiller Net Pump Performances (60 Hz)

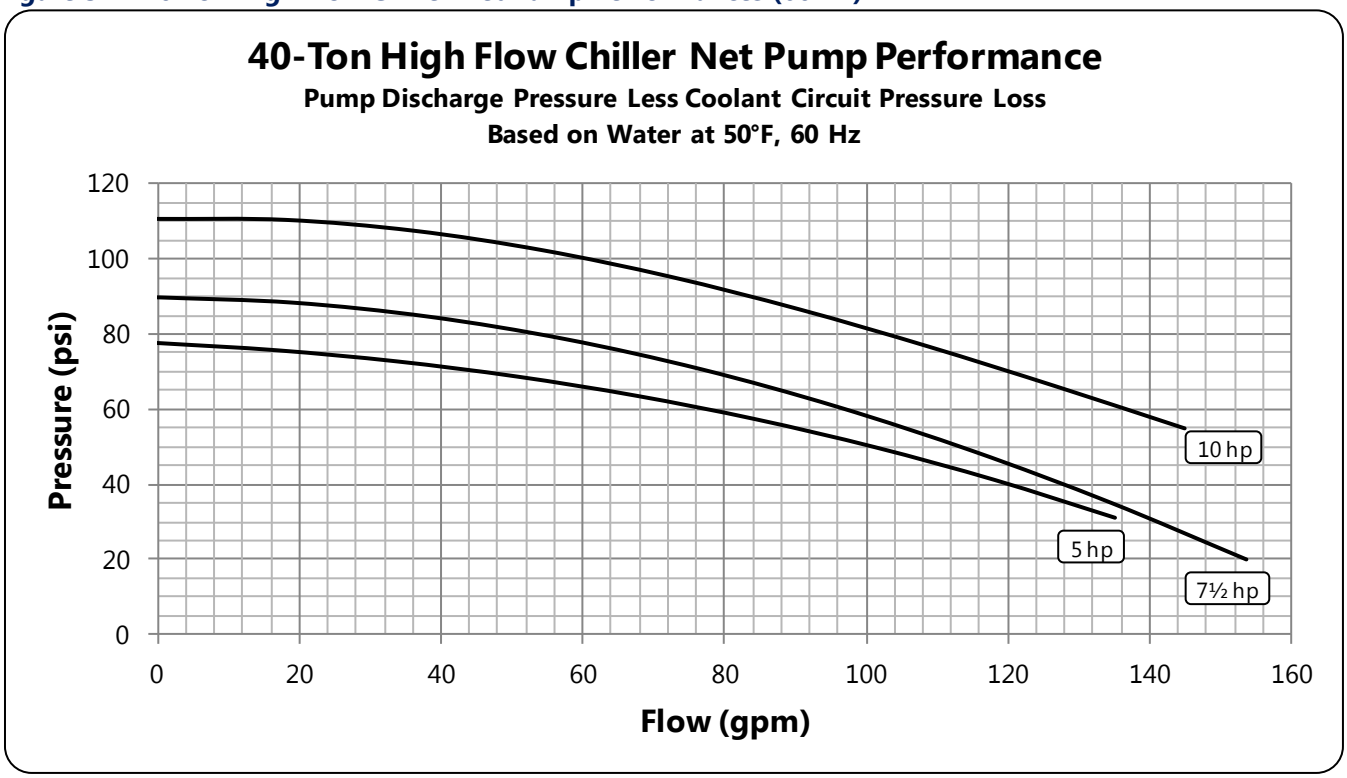

Coolant and Condenser Circuit Pressure Drops

Figure 33 – Chiller Coolant Circuit Pressure Drop (4-Ton and 5-Ton)

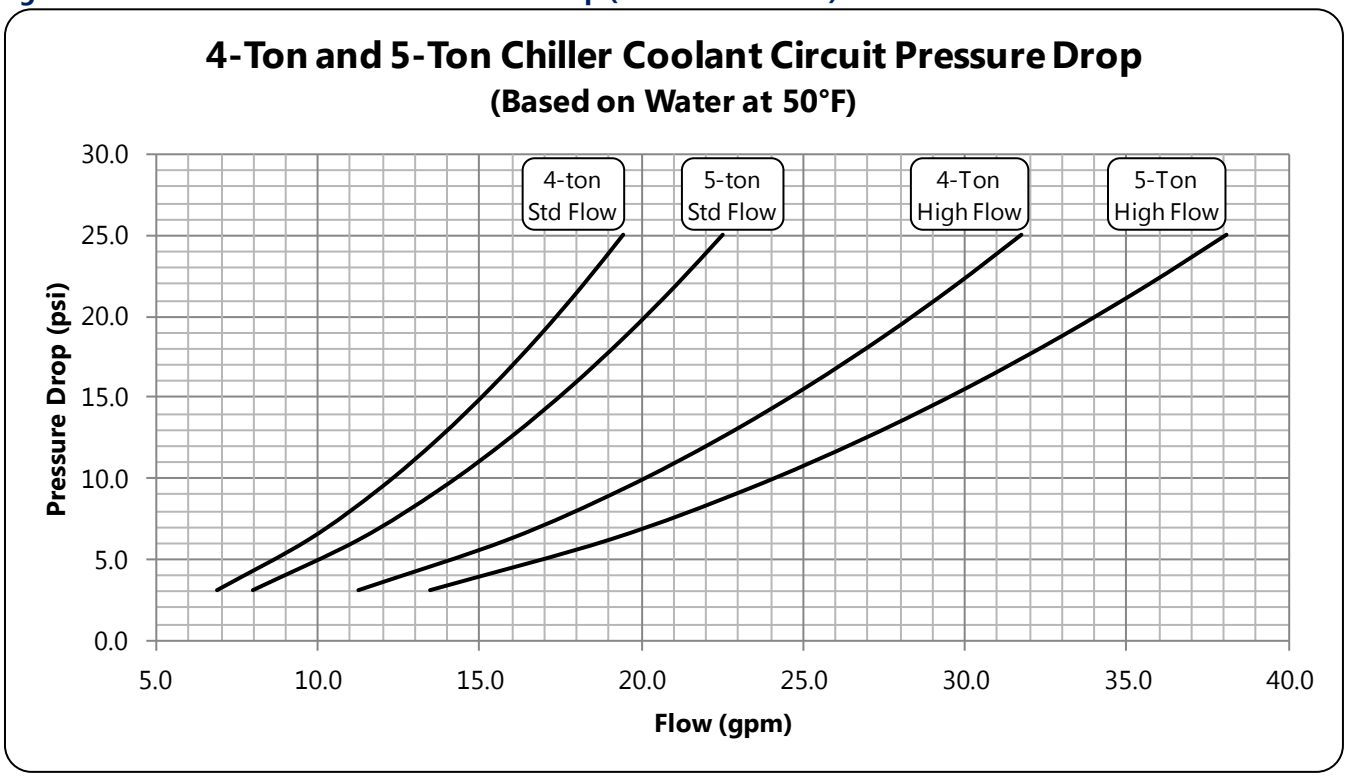

Figure 34 – Chiller Coolant Circuit Pressure Drop (7½-Ton and 10-Ton)

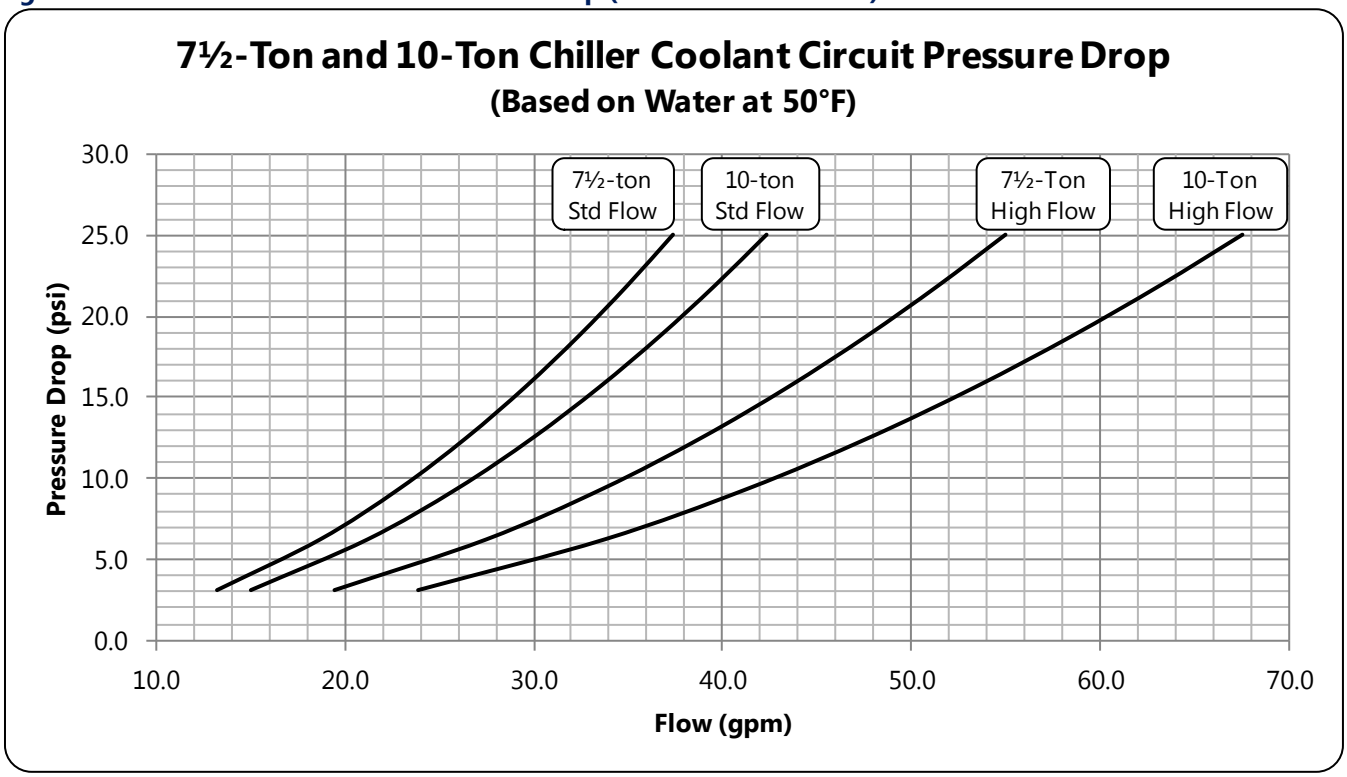

Figure 35 – Chiller Coolant Circuit Pressure Drop (13-Ton and 15-Ton)

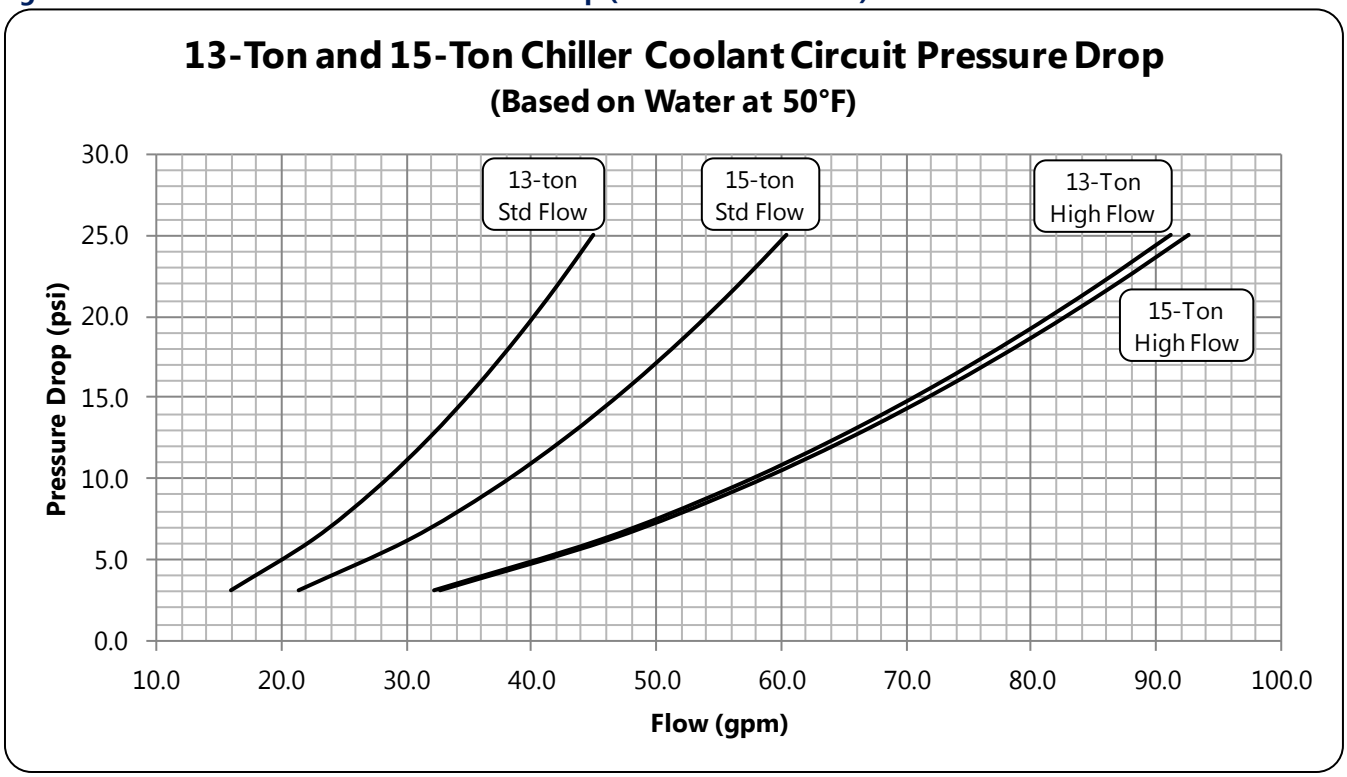

Figure 36 – Chiller Coolant Circuit Pressure Drop (20-Ton and 25-Ton)

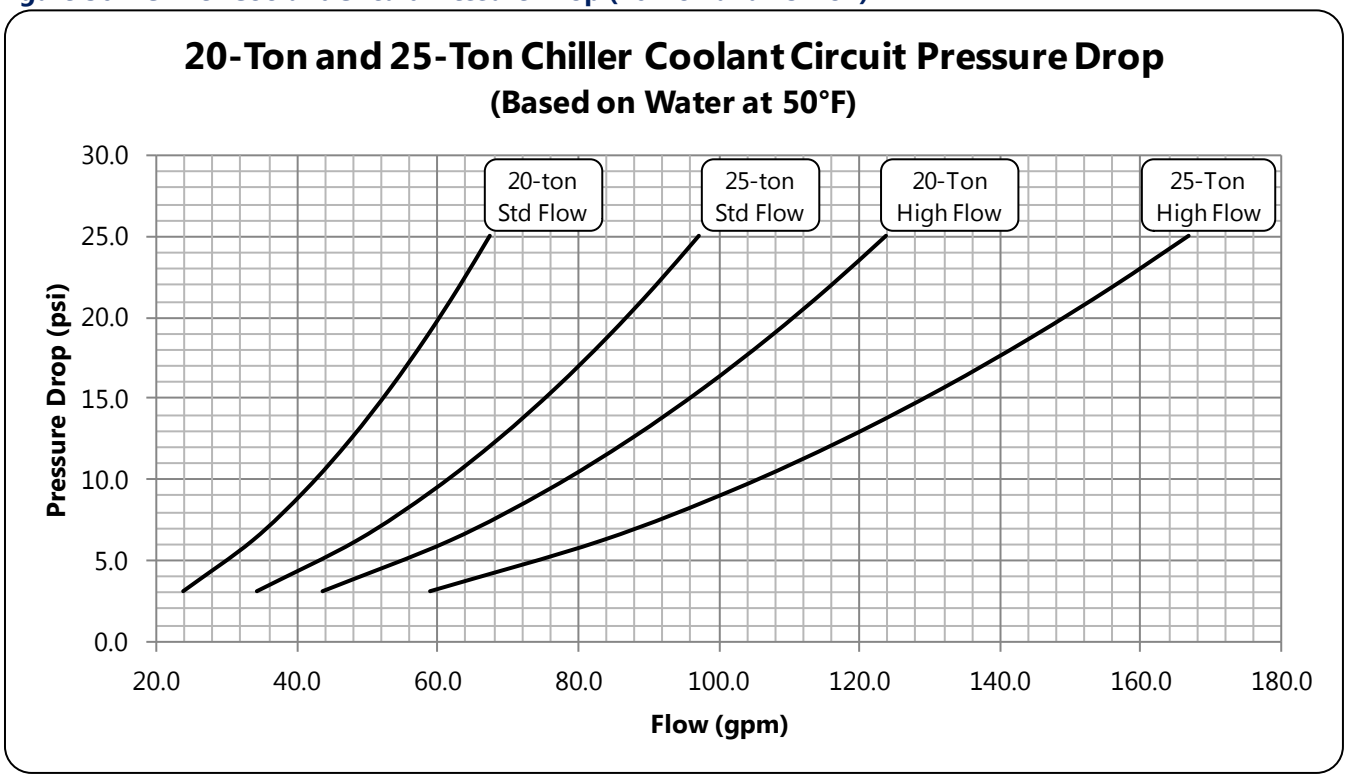

Figure 37 – Chiller Coolant Circuit Pressure Drop (30-Ton and 35-Ton)

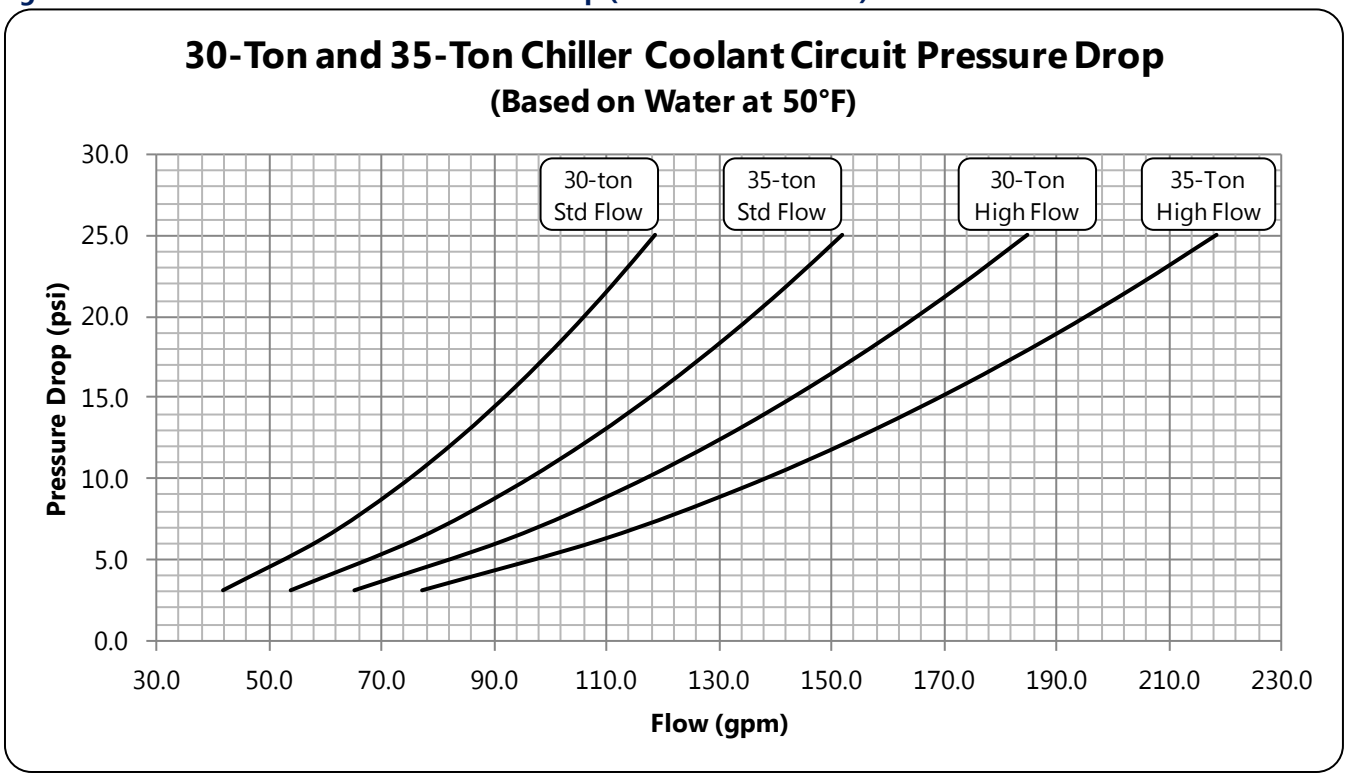

Figure 38 – Chiller Coolant Circuit Pressure Drop (40-Ton)

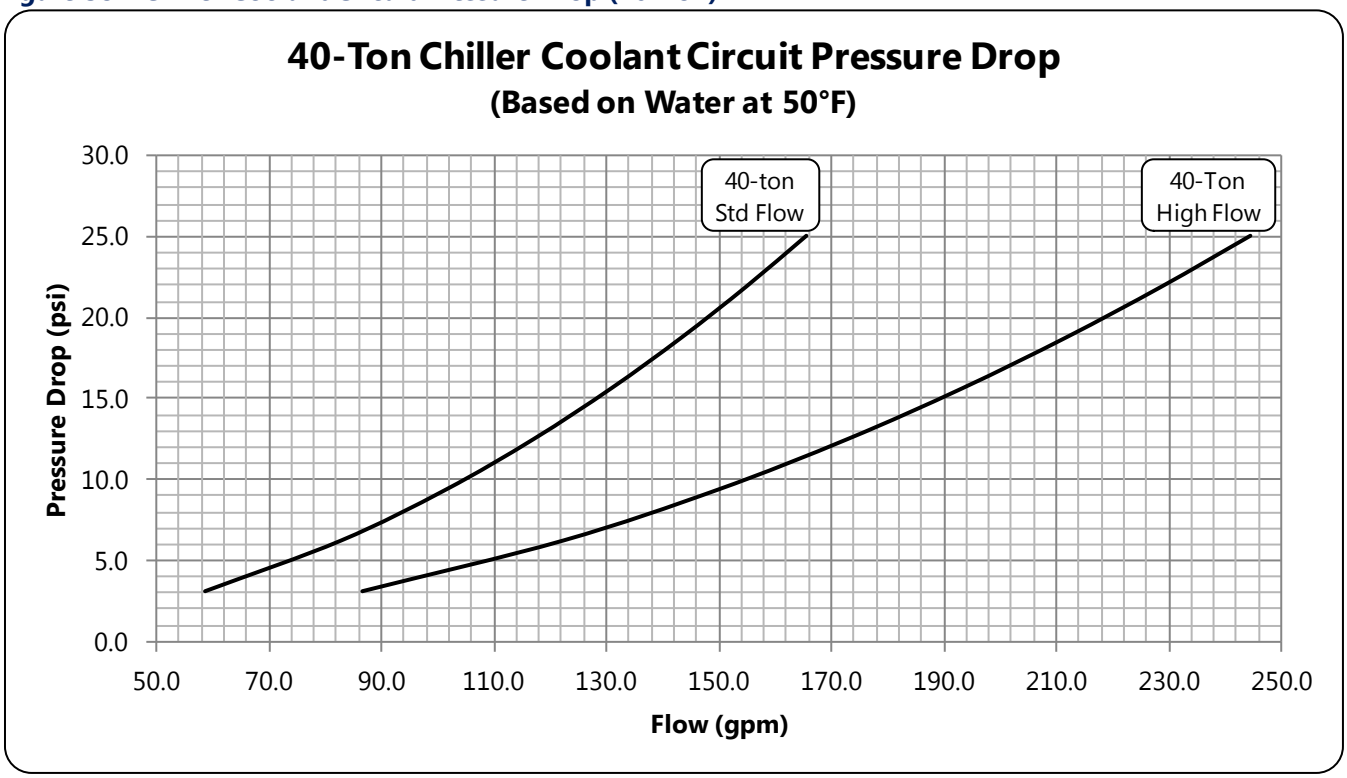

Figure 39 – Water Cooled Condenser Pressure Drop Curve (NQW05 – NQW15)

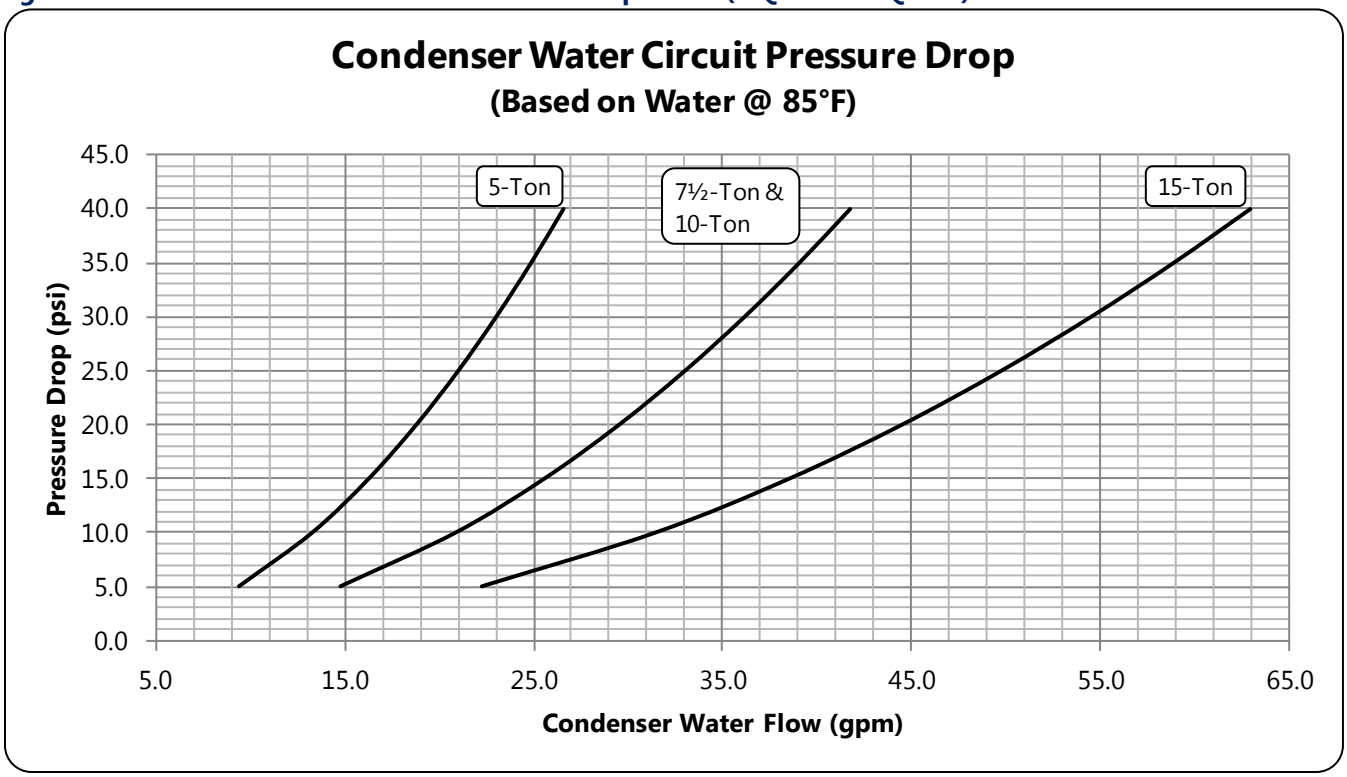

Figure 40 – Water Cooled Condenser Pressure Drop Curve (NQW20 – NQW40)

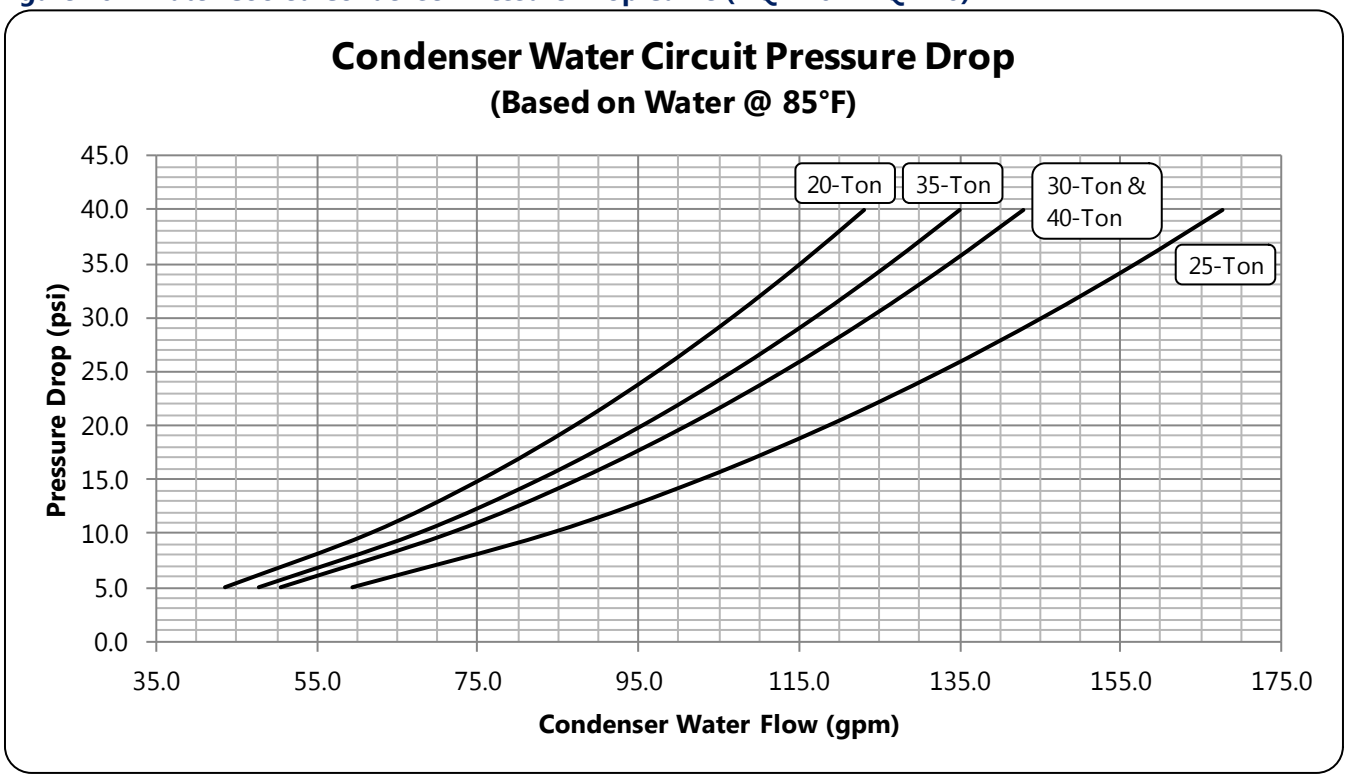

Application Considerations

The following section describes various application topics that are important for many industrial cooling system designs. As is the case with all chilled water system designs, we recommend care be taken to ensure all aspects of the system are considered and all extreme operating conditions accounted for. If your application is out the application considerations shown in this section, contact your local sales representative for assistance.

Unit Sizing

The Performance Data of this product catalog shows the chiller performances at select conditions that cover the majority of design conditions common in industrial chiller applications. If your design conditions fall between the points shown interpolation is allowed; however extrapolation is not.

Over-sizing chillers is sometimes necessary to allow for future growth. While this practice may be necessary, it is highly recommended chillers be sized for continuous operation at 30% load or more to avoid unwanted reductions in system efficiency, excessive electrical power use, and compressor cycling due to reduced chiller loading.

Unit Location

All standard chillers are designed for indoor installation with 60°F and 110°F ambient air. Chillers with an integral air-cooled condenser and the outdoor-duty construction option may be located outdoors in areas with -20°F and 110°F ambient air. Chillers with a remote air-cooled condenser are designed to have the chiller located indoors in an area with 60°F and 110°F ambient air and the remote condenser outdoors in an area with -20°F and 110°F ambient air. For remote air-cooled condensers allow a minimum of 48 inches between the condenser and any walls or obstructions. For installations with multiple remote air-cooled condensers, allow a minimum of 96 inches between condensers placed side-by-side or 48 inches for condensers placed end-to-end. In all cases install the equipment on a rigid surface suitable to support the full operating weight of the unit. Level all equipment to ensure proper operation. See the NQ Series manual for installation guidelines for designing the interconnecting refrigeration piping as well as estimating the required refrigerant charge for the system.

Serviceability was an important factor in the design of our equipment. Do not compromise this feature by locating the chiller in an inaccessible area. When locating the chiller it is important to consider accessibility to the components to allow for proper maintenance and servicing of the unit. In general, allow a minimum of 36 inches of clearance around all sides and above the unit. Avoid locating piping or conduit over the unit. This ensures easy access with an overhead crane or lift to lift out heavier components when they are replaced or serviced.

Proper ventilation is another important consideration when locating the unit. Locate the unit in an area that will not rise above 110°F. In addition, ensure the condenser and evaporator refrigerant pressure relief valves can vent in accordance with all local and national codes.

Chillers with an integral air-cooled condenser require a minimum of 36 inches of clearance at both the condenser air inlet and condenser air discharge. They are not designed to have the condenser air discharge ducted. Improper clearance or poor ventilation will reduce the cooling capacity of the chiller and may cause high refrigerant pressure problems. In order to avoid possible low refrigerant pressure safety trips during start-up, maintain the inlet air temperature above 60°F. If outside air is ducted into an indoor chiller with an integral air-cooled condenser there is an option for low ambient heat pressure controls which allow for incoming air temperatures down to 0°F.

Process Fluid Temperature

The chiller can operate with a variety of different supply and return temperatures. The standard operating range for the process fluid is 20°F to 80°F with a minimum entering coolant temperature of 22.5°F. The chiller can handle an initial pull down of a reservoir or process fluid loop on start-up up to 95°F entering fluid temperature. Under normal continuous operation, we recommend the entering water temperature not exceed 90°F.

Process Fluid Flow

The performances in this publication are for a coolant temperature rise of 10°F. A high flow unit option is available which features a larger evaporator for lower coolant pressure drops at higher flows. The chiller is capable of operating with different operating temperature differentials provided certain flow limitations are not exceeded and correction to capacity, pressure drops, and other operating parameters are made. The minimum flow rates shown in Table 11 are the minimum flows required for a standard flow chiller to prevent fouling and to ensure the chiller stays within normal refrigerant operating conditions. The fouling factor used to calculate the ratings of the vessels are 0.00010 Ft^2 • Hr • °F/Btu.

Table 11 – Cooler Flow Rate Limitations

Chiller Model	Minimum Flow		Maximum Flow	
	Gpm	Psi	Gpm	Psi
NQ02	2.6	0.6	9.6	8.6
NQ03	3.9	1.0	14.2	13.1
NQ04	4.9	1.5	19.6	23.8
NQ05	6.4	2.2	23.4	29.7
NQ08	9.2	1.9	34.2	25.7
NQ10	14.0	3.2	51.2	42.4
NQ13	14.7	2.4	58.8	38.4
NQ15	18.7	2.5	69.2	34.2
NQ20	25.0	2.9	92.0	39.5
NQ25	31.5	2.2	116.6	30.8
NQ30	37.2	2.6	138.2	35.7
NQ35	42.7	2.2	159.8	30.2
NQ40	47.6	2.2	181.4	32.6

If the process flow requirement is lower than the minimum shown in Table 11, multiple smaller chillers may be used. Another alternative is to use a primary pumping loop designed for lower flow at a higher temperature rise and a secondary pumping loop designed for a higher flow and lower temperature drop through the chiller. If a secondary pumping loop is used, the mixed temperature of coolant entering the evaporator must be a minimum of 5°F above the set point of the chiller.

The maximum flow limitation shown in Table 11 is based upon a 5°F drop across the cooler of a standard flow chiller; however, these flows often result in pressure losses greater than 20 psi which are considered excessive and impractical. For systems designed for process fluid temperature rises less than 10°F consider using the high flow chiller option to reduce the pressure loss through the chiller. Refer to Figures 33 – 38 to determine the coolant circuit pressure loss at design flow to ensure the pumping system is adequately sized.

Another solution to accommodating a process fluid flow higher than the maximum flow limitation shown in Table 11 is to use an external bypass around the chiller. This results in mixing a portion of the warm return process fluid with the cooler water from the chiller. In some cases it is possible to custom design a chiller with a primary pumping loop for higher flow and lower temperature rise and a secondary pumping loop designed for lower flow and higher temperature drop through the chiller; however, this requires a larger volume reservoir to limit turbulence and splashing and to ensure proper mixing. The larger reservoir required may be too large to fit inside the cabinet so mixing external to the chiller with a bypass line is often the lower cost and better alternative.

Condenser Air Temperature

All standard units with an integral air-cooled condenser are design to allow the unit to start and operate with an inlet air temperature between 60°F to 110°F. If the chiller is located indoors and outside air is to be ducted in, there is an option for low ambient heat pressure controls to allow for incoming air temperatures down to 0°F. There is also an option for a chiller integral air-cooled condenser to be constructed for outdoor-duty which will allow the unit to start and operate with an inlet air temperature range between -20°F and 110°F.

All remote air-cooled condenser chillers include a separate factory selected remote air-cooled condenser designed specifically to meet the needs of the chiller to which it is connected. The remote air-cooled condensers use a variable speed fan and, depending on the size, one or more fixed speed fans to maintain the proper refrigerant pressures. The remote air-cooled condenser and chiller combination is designed to allow the unit to start and operate with an inlet air temperature range between -20°F and 110°F. The minimum ambient air temperature at which the chiller can start is -20°F based on still air.

For certain high ambient areas such as desert locations, there is an option for a high-ambient package. This includes changing the refrigerant from R410A to R407c as well as the associated refrigeration component changes required to use the different refrigerant. With this option the chiller is able to operate with ambient temperatures up to 122°F. Careful consideration must be taken in locations typical of such high ambient conditions. Consult your local sales representative for assistance with applications that require higher than 110°F ambient air operation.

System Fluid Freeze Protection

For applications where the system fluid is exposed to ambient conditions of 32°F or colder and/or the set point of the system is below 45°F, antifreeze must be added to the system fluid to protect the chiller and system piping from potential damage. The amount of antifreeze varies depending on the actual desired operating conditions and must be enough to provide freeze protection to temperatures 15°F colder than the coldest temperature anticipated. Use only antifreeze solutions designed for heat exchanger duty. Do not use automotive antifreeze because there is a potential for fouling that can occur once its relatively short-lived inhibitors break down.

Strainers

Each evaporator has a 20-mesh inlet strainer to protect the evaporator. For units with water-cooled condensers, we recommend a filtration system capable of filtering down to a minimum of 20 mesh to protect the condenser from contamination.

Notes

7720 North Lehigh Avenue
Niles, Illinois 60714-3491
Tel: (847) 966-2260
Toll Free: (888) 828-7387
Fax: (847) 966-9358
Email: info@thermalcare.com
Website: www.thermalcare.com

Manufacturer reserves the right to change specifications or design without notice or obligation.

NQ Series Product Catalog (2-232.19)
January 2015