DIE CAST MACHINERY LLC

3246 West Monroe Street
Waukegan, IL 60085-3029 USA
1-847-360-9170 Phone
www.diecastmachinery.com

Die Cast Machinery, LLC Inventory number: DCM-4106

Used HPM Model: II-400-A Tie Bar 5 inch (Diameter) Tie Bar For HPM II-400-A or HPM II-400-Z

Status:	**Sold**
Manufacturer:	HPM
Model:	II-400-A Tie Bar
Size:	5 inch (Diameter) Tie Bar For HPM II-400-A or H
ID Number:	DCM-4106

HPM - II-400-A Tie Bar 5 inch (Diameter) Tie Bar For HPM II-400-A or HPM II-400-Z , n/a Controls

View this machine online: DCM-4106

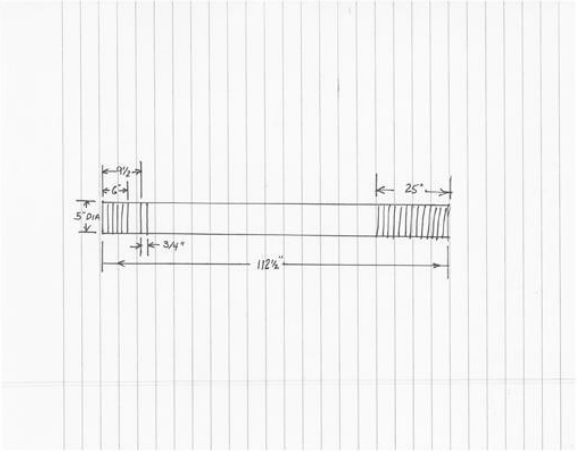

Specifications

	U.S. Standard	Metric
Tie Bar Diameter:	5 inches	127 mm
Tie Bar Lenght:	112.5 inches	2,857.5 mm
Tie Bar Groove Width:	.75 inches	19.05 mm
Distance end of bar to front edge of Groove:	9.5 inches	241.3 mm
Threaded Length on Front of Tie Bar:	6 inches	152 mm
Threaded Length on Die Height End of Bar:	25 inches	635 mm

Features & Accessories:

- Can ship same day from stock
- Purchase of Tie Bar Includes the Front Nut as Pictured
- Expedited Delivery Available
- Full Crating Available or Pick-Up with your own truck as-is
- Can ship same day

Terms of Sale:

Price: sold
Shipping Terms: F.O.B. Warehouse
Questions? Call (847) 360-9170 and mention DCM-4106.

DIE CAST MACHINERY LLC

3246 West Monroe Street
Waukegan, IL 60085-3029 USA
1-847-360-9170 Phone
www.diecastmachinery.com

Photos - DCM-4106

Click any photo to open it full size on our website.

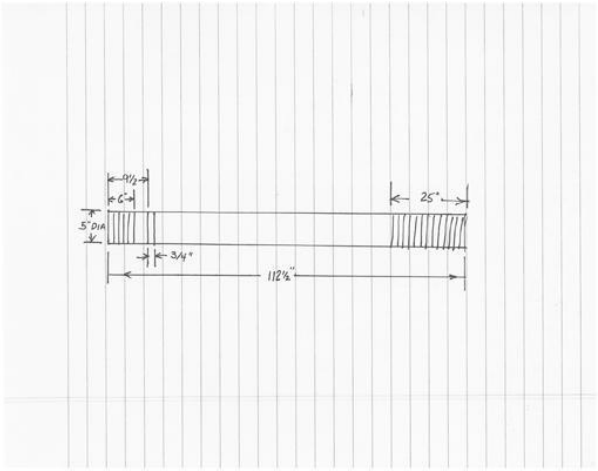

Photo 1 of DCM-4106 - view online



Photo 2 of DCM-4106 - view online



Photo 3 of DCM-4106 - view online



Photo 4 of DCM-4106 - view online

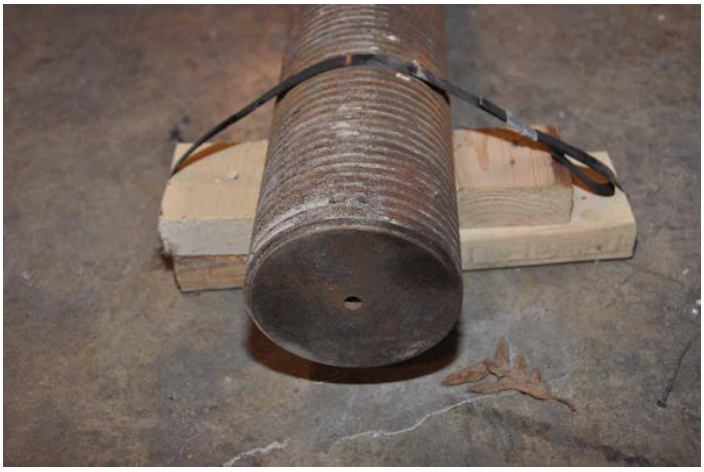

Photo 5 of DCM-4106 - view online



Photo 6 of DCM-4106 - view online

DIE CAST MACHINERY LLC

3246 West Monroe Street
Waukegan, IL 60085-3029 USA
1-847-360-9170 Phone
www.diecastmachinery.com

Photos - DCM-4106 (continued)

Click any photo to open it full size on our website.



Photo 7 of DCM-4106 - view online

Description:

Used, HPM Model II-400-A Tie Bar 5 inch (Diameter) Tie Bar For HPM II-400-A or HPM II-400-Z For_Sale, Features Include: Purchase of Tie Bar Includes the Front Nut as Pictured, Expedited Delivery Available, Full Crating Available or Pick-Up with your own truck as-is, Can ship same day, n/a controls, second Hand, DCM-4106

PURCHASER'S (Buyer's) RESPONSIBILITY AND INDEMNITY: Used machines, equipment or any part thereof, may not incorporate approved activating mechanisms, operator safety devices or safety guards as required by OSHA or otherwise. It shall be a Purchaser's (Buyer's) responsibility to ensure that any and all merchandise or equipment purchased from Die Cast Machinery, LLC or its affiliates is installed and operated in a proper and safe manner. Purchaser (Buyer) also acknowledges that it may have to install or change guards, safeties, warnings or other components to ensure that the merchandise or machines purchased will conform to all laws, codes, regulations, ordinances, statutes, insurance requirements and industry standards. Purchaser agrees to defend, indemnify and hold harmless Die Cast Machinery, LLC from and against all suits, claims, costs, damages and expenses, including, but not limited to, reasonable attorneys' fees, arising out of, or in connection with, the transportation, purchase, ownership, or use of the merchandise or equipment sold hereunder. Information has been obtained from sources deemed reliable, buyers should avail themselves of the opportunity to inspect the items before purchase.