DIE CAST MACHINERY LLC

3246 West Monroe Street
Waukegan, IL 60085-3029 USA
1-847-360-9170 Phone
www.diecastmachinery.com

Die Cast Machinery, LLC Inventory number: DCM-5659

Used Sterlco Model: M2B2016-M1 24 kW Single Zone Portable Hot Oil Process Heater Temperature Control Unit with Cooling Water Circuit

Status:	**Sold**
Manufacturer:	Sterlco
Model:	M2B2016-M1
Size:	24 kW
ID Number:	DCM-5659

Sterlco - M2B2016-M1 24 kW Single Zone Portable Hot Oil Process Heater Temperature Control Unit with Cooling Water Circuit, Sterlco M2B Microprocessor Controls

View this machine online: DCM-5659



Specifications

	U.S. Standard	Metric
Main Heater Power (Zone #1):	24 KW	24 KW
Pump Motor Size (Zone #1):	2 HP @ 1,755 RPM	1.49 KW @ 1,755 RPM
Flow Rate (Zone #1):	18 gallons per minute	68.1 liters per minute
Connection size/type:	1 inch NPT	1 inch NPT
Maximum Operating Temperature:	550 degrees F	288 degrees C
Catalog Overall Size (L x W x H):	42 x 19 x 46 inches	1066.8 x 482.6 x 1168.4 mm
Full Load Amps @ 480/3/60:	32.2 AMPS	32.2 AMPS
Catalog Approximate Shipping Weight:	600 pounds	273 kg

Features & Accessories:

- Call us on our Hot Oil Temperature Control Unit Hot Line 7:00 AM to 7:00 PM at 1-847-360-9170 Extension 2
- Sterlco M2B Microprocessor Controller
- Alarms for low fluid pressure, pump rotation, over temperature
- Set points for Process, High Alarm, Low Alarm
- Displays for Process Temperature, Return Temperature and Temperature Difference
- Equipped with Water Cooling Circuit
- Built-in pump pressure relief valve

Terms of Sale:

Price: sold

Shipping Terms: F.O.B. Warehouse

Questions? Call (847) 360-9170 and mention DCM-5659.

DIE CAST MACHINERY LLC

3246 West Monroe Street
Waukegan, IL 60085-3029 USA
1-847-360-9170 Phone
www.diecastmachinery.com

Photos - DCM-5659

Click any photo to open it full size on our website.



Photo 1 of DCM-5659 - view online



Photo 2 of DCM-5659 - view online



Photo 3 of DCM-5659 - view online



Photo 4 of DCM-5659 - view online



Photo 5 of DCM-5659 - view online



Photo 6 of DCM-5659 - view online

Photos - DCM-5659 (continued)

Click any photo to open it full size on our website.



Photo 7 of DCM-5659 - view online



Photo 8 of DCM-5659 - view online

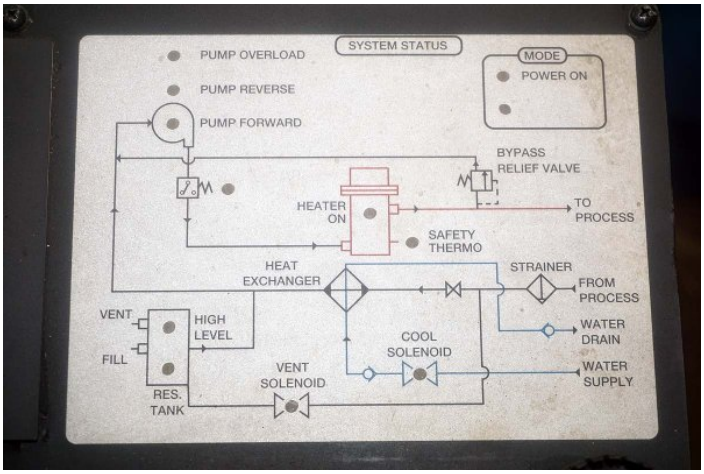

Photo 9 of DCM-5659 - view online

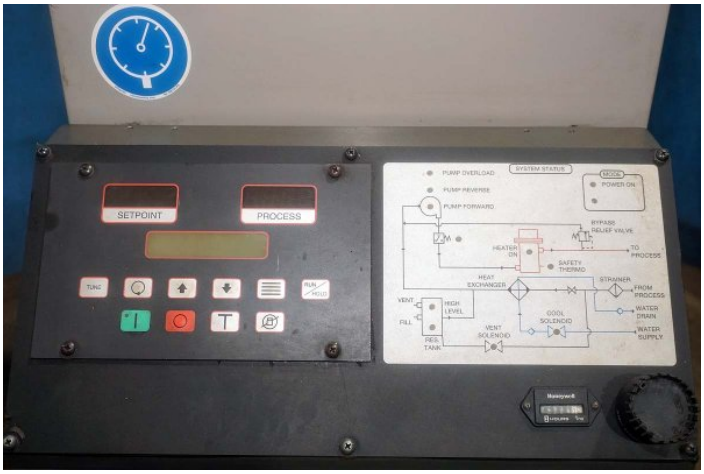

Photo 10 of DCM-5659 - view online



Photo 11 of DCM-5659 - view online

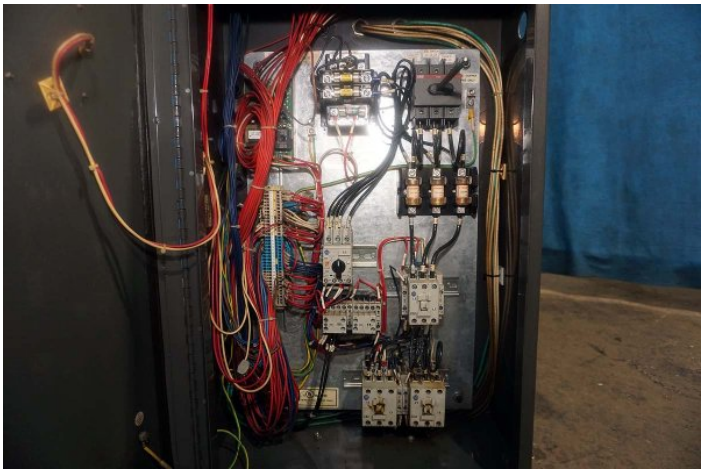

Photo 12 of DCM-5659 - view online

Photos - DCM-5659 (continued)

Click any photo to open it full size on our website.

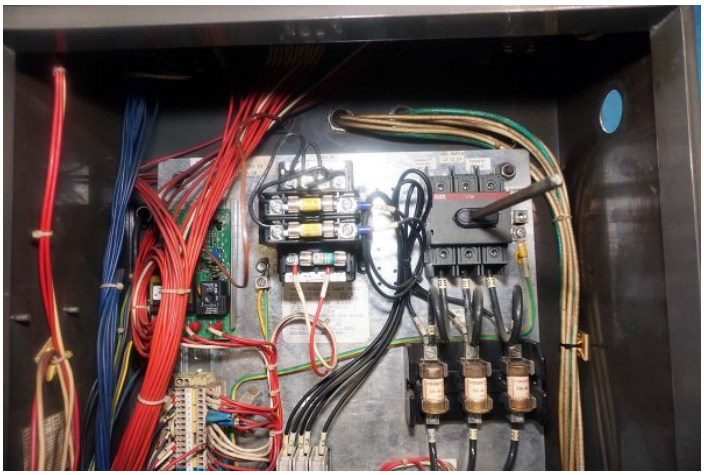

Photo 13 of DCM-5659 - view online

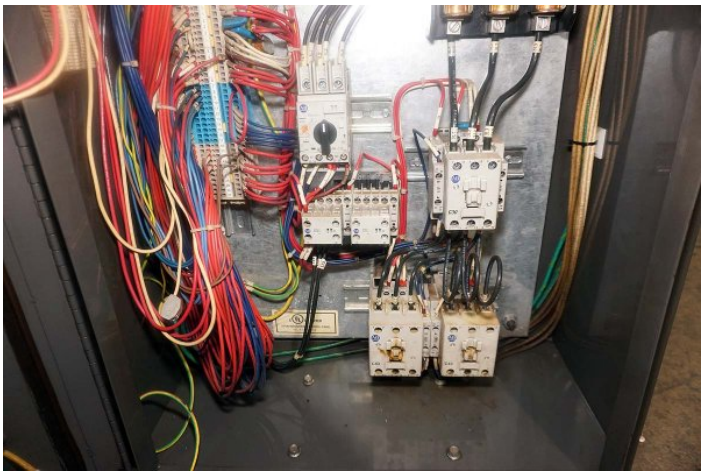

Photo 14 of DCM-5659 - view online



Photo 15 of DCM-5659 - view online



Photo 16 of DCM-5659 - view online



Photo 17 of DCM-5659 - view online



Photo 18 of DCM-5659 - view online

Photos - DCM-5659 (continued)

Click any photo to open it full size on our website.



Photo 19 of DCM-5659 - view online



Photo 20 of DCM-5659 - view online



Photo 21 of DCM-5659 - view online



Photo 22 of DCM-5659 - view online



Photo 23 of DCM-5659 - view online



Photo 24 of DCM-5659 - view online

Photos - DCM-5659 (continued)

Click any photo to open it full size on our website.



Photo 25 of DCM-5659 - view online



Photo 26 of DCM-5659 - view online



Photo 27 of DCM-5659 - view online

Description:

Used, Sterlco Model M2B2016-M1 24 kW Single Zone Portable Hot Oil Process Heater Temperature Control Unit with Cooling Water Circuit For Sale, Features include: Sterlco M2B Microprocessor Controller, Alarms for low fluid pressure, pump rotation, over temperature, Set points for Process, High Alarm, Low Alarm, Displays for Process Temperature, Return Temperature and Temperature Difference, Equipped with Water Cooling Circuit, Built-in pump pressure relief valve, Sterlco M2B Microprocessor Controls, Second Hand, DCM-5659

PURCHASER'S (Buyer's) RESPONSIBILITY AND INDEMNITY: Used machines, equipment or any part thereof, may not incorporate approved activating mechanisms, operator safety devices or safety guards as required by OSHA or otherwise. It shall be a Purchaser's (Buyer's) responsibility to ensure that any and all merchandise or equipment purchased from Die Cast Machinery, LLC or its affiliates is installed and operated in a proper and safe manner. Purchaser (Buyer) also acknowledges that it may have to install or change guards, safeties, warnings or other components to ensure that the merchandise or machines purchased will conform to all laws, codes, regulations, ordinances, statutes, insurance requirements and industry standards. Purchaser agrees to defend, indemnify and hold harmless Die Cast Machinery, LLC from and against all suits, claims, costs, damages and expenses, including, but not limited to, reasonable attorneys' fees, arising out of, or in connection with, the transportation, purchase, ownership, or use of the merchandise or equipment sold hereunder. Information has been obtained from sources deemed reliable, buyers should avail themselves of the opportunity to inspect the items before

3246 West Monroe Street
Waukegan, IL 60085-3029 USA
1-847-360-9170 Phone
www.diecastmachinery.com

purchase.