DIE CAST MACHINERY LLC

3246 West Monroe Street
Waukegan, IL 60085-3029 USA
1-847-360-9170 Phone
www.diecastmachinery.com

Die Cast Machinery, LLC Inventory number: DCM-5685

Used Sterlco Model: M2B-2016-U1 36 kW Single Zone Portable Hot Oil Process Heater Temperature Control Unit with Cooling Water Circuit

Status:	**Sold**
Manufacturer:	Sterlco
Model:	M2B-2016-U1
Size:	36 kW
ID Number:	DCM-5685

Sterlco - M2B-2016-U1 36 kW Single Zone Portable Hot Oil Process Heater Temperature Control Unit with Cooling Water Circuit, M2B+ Microprocessor Controls

View this machine online: DCM-5685



Specifications

	U.S. Standard	Metric
Main Heater Power (Zone #1):	36 KW, 1725 RPM	36 kW, 1725 RPM
Pump Motor Size (Zone #1):	2 HP	1.47 KW
Flow Rate (Zone #1):	24 gallons per minute	91 liters per minute
Connection size/type:	1 inch NPT	1 inch NPT
Maximum Operating Temperature:	550 degrees F	288 degrees C
Overall Size (L x W x H):	55 x 25 x 63 inches	1397 x 635 x 1600 mm
Full Load Amps @ 480/3/60:	46.7 AMPS	46.7 AMPS
Approximate Shipping Weight:	950 pounds	430 kG

Features & Accessories:

- Call us on our Hot Oil Temperature Control Unit Hot Line 7:00 AM to 7:00 PM at 1-847-360-9170 Extension 2
- Sterlco M2B+ Microprocessor Controller
- Alarms for low fluid pressure, pump rotation, over temperature
- Set points for Process, High Alarm, Low Alarm
- Displays for Process Temperature, Return Temperature and Temperature Difference
- Equipped with Water Cooling Circuit & Built-in pump pressure relief valve
- Unit on casters for easy movement

Terms of Sale:

Price: sold

Shipping Terms: F.O.B. Warehouse

Questions? Call (847) 360-9170 and mention DCM-5685.

DIE CAST MACHINERY LLC

3246 West Monroe Street
Waukegan, IL 60085-3029 USA
1-847-360-9170 Phone
www.diecastmachinery.com

Photos - DCM-5685

Click any photo to open it full size on our website.



Photo 1 of DCM-5685 - view online



Photo 2 of DCM-5685 - view online



Photo 3 of DCM-5685 - view online



Photo 4 of DCM-5685 - view online



Photo 5 of DCM-5685 - view online



Photo 6 of DCM-5685 - view online

Photos - DCM-5685 (continued)

Click any photo to open it full size on our website.



Photo 7 of DCM-5685 - view online



Photo 8 of DCM-5685 - view online



Photo 9 of DCM-5685 - view online



Photo 10 of DCM-5685 - view online



Photo 11 of DCM-5685 - view online



Photo 12 of DCM-5685 - view online

Photos - DCM-5685 (continued)

Click any photo to open it full size on our website.

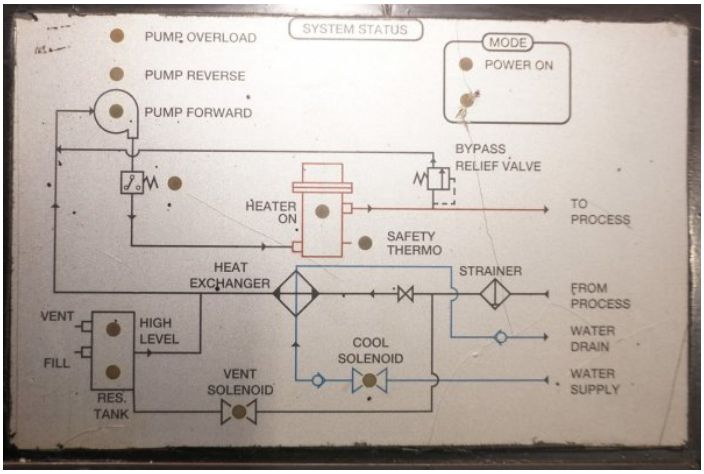

Photo 13 of DCM-5685 - view online

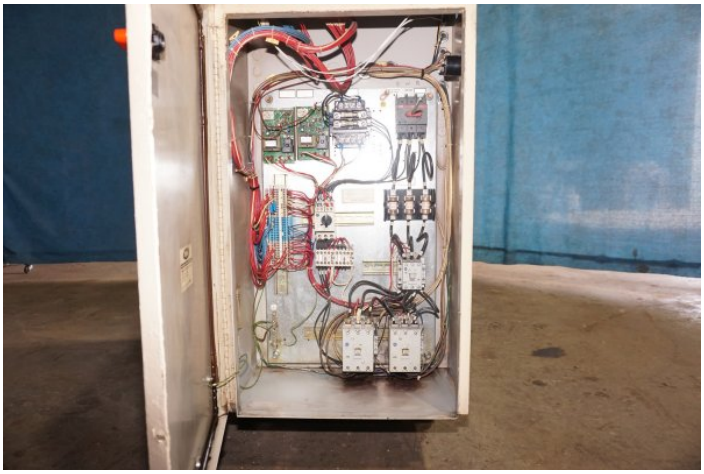

Photo 14 of DCM-5685 - view online

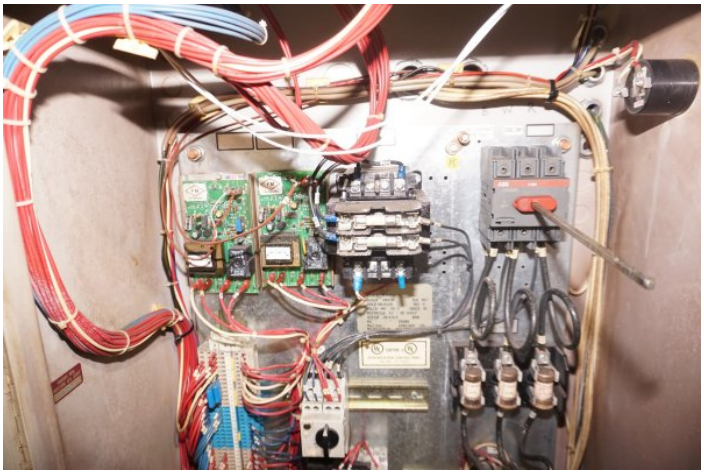

Photo 15 of DCM-5685 - view online



Photo 16 of DCM-5685 - view online

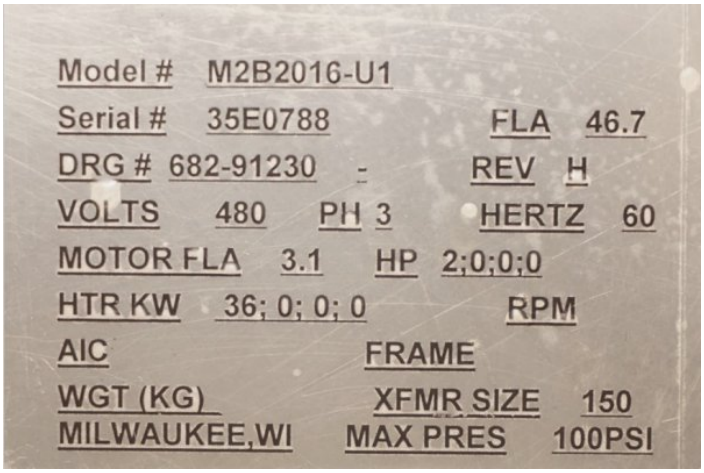

Photo 17 of DCM-5685 - view online



Photo 18 of DCM-5685 - view online

Photos - DCM-5685 (continued)

Click any photo to open it full size on our website.



Photo 19 of DCM-5685 - view online



Photo 20 of DCM-5685 - view online



Photo 21 of DCM-5685 - view online



Photo 22 of DCM-5685 - view online



Photo 23 of DCM-5685 - view online



Photo 24 of DCM-5685 - view online

Photos - DCM-5685 (continued)

Click any photo to open it full size on our website.



Photo 25 of DCM-5685 - view online



Photo 26 of DCM-5685 - view online



Photo 27 of DCM-5685 - view online



Photo 28 of DCM-5685 - view online

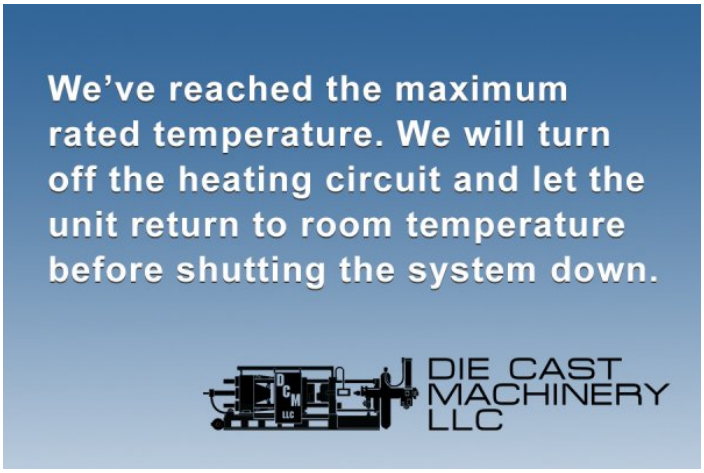

Photo 29 of DCM-5685 - view online



Photo 30 of DCM-5685 - view online

Photos - DCM-5685 (continued)

Click any photo to open it full size on our website.



Photo 31 of DCM-5685 - view online



Photo 32 of DCM-5685 - view online



Photo 33 of DCM-5685 - view online



Photo 34 of DCM-5685 - view online



Photo 35 of DCM-5685 - view online



Photo 36 of DCM-5685 - view online

Photos - DCM-5685 (continued)

Click any photo to open it full size on our website.



Photo 37 of DCM-5685 - view online



Photo 38 of DCM-5685 - view online



Photo 39 of DCM-5685 - view online



Photo 40 of DCM-5685 - view online

Description:

Used, Sterlco Model M2B-2016-U1 36 kW Single Zone Portable Hot Oil Process Heater Temperature Control Unit with Cooling Water Circuit For Sale, Features include: Sterlco M2B+ Microprocessor Controller, Alarms for low fluid pressure, pump rotation, over temperature, Set points for Process, High Alarm, Low Alarm, Displays for Process Temperature, Return Temperature and Temperature Difference, Equipped with Water Cooling Circuit & Built-in pump pressure relief valve, Unit on casters for easy movement, M2B+ Microprocessor Controls, Second Hand, DCM-5685

PURCHASER'S (Buyer's) RESPONSIBILITY AND INDEMNITY: Used machines, equipment or any part thereof, may not incorporate approved activating mechanisms, operator safety devices or safety guards as required by OSHA or otherwise. It shall be a Purchaser's (Buyer's) responsibility to ensure that any and all merchandise or equipment purchased from Die Cast Machinery, LLC or its affiliates is installed and operated in a proper and safe manner. Purchaser (Buyer) also acknowledges that it may have to install or change guards, safeties, warnings or other components to ensure that the merchandise or machines purchased will conform to all laws, codes, regulations, ordinances, statutes, insurance requirements and industry standards. Purchaser agrees to defend, indemnify and hold harmless Die Cast Machinery, LLC from and against all suits, claims, costs, damages and expenses, including, but not limited to, reasonable attorneys' fees, arising out of, or in connection with, the transportation, purchase, ownership, or use of the merchandise or equipment sold hereunder. Information has been obtained from sources deemed reliable, buyers should avail themselves of the opportunity to inspect the items before

purchase.